ARTICLE 14-35
LANDSCAPE REQUIREMENTS

(Revised Ord. No. 01-177, and 2014-21)

CONTENTS

14-35-1 INTENT
14-35-2 INTERPRETATION AND SCOPE
14-35-3 DEFINITIONS
14-35-4 GENERAL LANDSCAPE REQUIREMENTS
14-35-5 LAKE PLEASANT PARKWAY CORRIDOR
14-35-6 PLAN SUBMITTAL REQUIREMENTS
14-35-7 LANDSCAPE INSTALLATION AND MAINTENANCE
14-35-8 PERMITS

14-35-1 INTENT (Ord. No. 93-22)

The process of development, with its alteration of the natural topography and vegetation and creation of impervious cover can have a negative effect on the ecological balance of an area by causing increases in air temperatures and accelerating the processes of runoff, erosion, and sedimentation. The economic base of the City can and should be protected through the preservation and enhancement of the unique natural beauty and vegetative space. Recognizing that the general objectives of this Article are to promote and protect the health, safety, and welfare of the public, these landscaping regulations are adopted for the following specific purposes:

- To aid in stabilizing the environment's ecological balance by contributing to the process of air purification, oxygen regeneration, groundwater recharge and storm water runoff retardation, while at the same time aiding in noise, glare and heat abatement;
- To provide visual buffering between land uses of differing character;
- To enhance the beautification of the City;
- To protect the character and stability of residential, business, institutional and industrial areas;
- To preserve the value of land and building; and
- To conserve energy and other natural resources.

14-35-2 INTERPRETATION AND SCOPE

A. The provisions of this Article of the Peoria Zoning Ordinance shall apply to a lot, site, or parcel of land when an application is being made for:

1. Site plan approval pursuant to Article 14-39, Section 14-39-9, Site Plan Review of this Ordinance. (Ord. No 02-80)

2. Signs pursuant to Article 14-34 of this Ordinance where landscaping is required.

3. Subdivisions pursuant to Chapter 24 of the Peoria City Code. (Ord. No. 03-06)

B. Not withstanding the application of Section 14-35-2-A above, these provisions shall not apply to the following:

1. An individual lot containing single family or duplex residence

2. Lots or sites within an approved Planned Area Development (P.A.D.) which have been approved with its own landscape plan prior to the adoption of this ordinance. However, these provisions shall be used as the basis for determining the landscaping plans for future P.A.D.'s and such P.A.D. landscaping plans shall meet or exceed the standards of these landscape regulations.

3. Restoration of a building that has been damaged or destroyed by fire, explosion, flood, tornado, riot, act of the public enemy, or accident of any kind. For purposes of this paragraph, "restoration" means the act of putting back into a former or original state.

4. Site Plans that included landscaping that were approved prior to the adoption of this ordinance.

5. Lots or sites subject to the provisions governing amendment to approved site plans, set forth in Article 14-39, Section 14-39-9, “Site Plan Review,” unless such site plan amendments will: (Ord. No. 02-80)

   a. Increase the number of stories in a building on the lot;

   b. Increase by more than ten percent (10%) or ten thousand (10,000) square feet, whichever is less, the combined floor areas of all buildings on the lot; or

   c. Increase the building or parking coverage on the lot by more than two thousand (2,000) square feet.

14-35-3 DEFINITIONS

A. *Cacti*: Any family of plants that have fleshy stems and branches with scales or spines instead of leaves and is capable of storing water and requiring no supplemental irrigation.

B. *Caliper*: The diameter of the trunk of a tree measured six (6) inches above ground level up to and including four (4) inch caliper size, and measured twelve (12) inches above ground level if the measurement taken at six (6) inches above ground level exceeds four (4) inches. If a tree is of a multi-trunk variety, the caliper of the tree is the average caliper of its two (2) largest trunks.

C. *Evergreen Tree or Shrub*: A tree or shrub of a species which normally retains its leaves/needles throughout the year.

D. *Ground Cover*: Natural mulch or plants of species which normally reach a height of less than two (2) feet upon maturity, installed in such a manner so as to form a continuous cover over the ground.

E. *Landscape Architect*: A person registered to practice landscape architecture in the State of Arizona.

F. *Landscape Buffer*: A landscape area that serves to screen the visual impacts caused by the differences in use, such buffer shall be located on the perimeter of the site.

G. *Landscape Materials*: Materials used for the purpose of landscape improvements which include any or all of the following: lawn or grass areas; trees, shrubs, ground cover or other plantings; irrigation systems; decorative rock, natural or man-made; decorative lighting; detention and retention ponds; waterfalls and man-made streams; and berms or mounds. (Ord. No. 03-182)

H. *Landscape Plan*: A graphic representation of the landscape development of a site indicating the location of all existing and proposed landscape improvements to be present on the site at the completion of the construction of the project.

I. *Landscaping*: An exterior improvement of property in accordance with an approved landscape plan and utilizing approved landscape materials.

J. *Palm Tree*: For the purpose of this Article means a vertical palm that can reach twenty (20) feet or greater in height upon maturity.

K. *Useable Open Space*: An improved area that enables or provides opportunities for residents to congregate or recreate. (Ord. No. 06-16)

14-35-4 GENERAL LANDSCAPE REQUIREMENTS

A. Required Landscape Areas

No part of any landscape area shall be used for any other use such as parking or display, except for required on-site retention areas or when such use is shown on the approved landscape plan except as otherwise provided in Chapter 14.

1. *On-Site Landscaped Areas*

All development projects requiring an approved landscape plan shall provide on-site landscaped areas located in accordance with the following standards and requirements:

a. (Ord. No. 04-186)

On-Site Landscaped Areas	Multi-Family & Non-Residential	Industrial	Single Family Residential	Schools
Required Area[1]				
Percentage of Net Site Area	20	10[2]	(a)	20
1 tree/ 5 shrubs per	400 sq ft	400 sq ft	1000 sq ft	800 sq ft
Street Frontage Area[3]				
Arterial Streets (ft)	15	10	10[4]	15
Collector and Local Streets (ft)	15	10	8[4]	10

[1] Water storage facilities, wireless communication facilities and similar land uses shall be exempt from the on-site landscape area requirements with the exception that street frontage landscaping shall be required.

[2] Mini-storage facilities and similar uses shall be considered industrial developments for the purposes of landscape requirements regardless of zoning designation. (Ord. No. 03-182)

[3] A landscaped area along all street frontages shall be established and maintained between the street right-of-way and any building, on-site parking area, residential property line or perimeter screen wall. The area of this landscape strip may be used to satisfy, to the extent provided, the on-site landscaped area set forth in this Section. Public utility facilities providing an essential service may be exempt from this standard as determined by the Planning Manager, provided that the development include the required plantings as set forth in this Section. Single-family residential subdivisions may provide an average of the frontage requirement along arterial roadways to accommodate wall undulation. (Ord. No. 03-182)

[4] All such landscaped areas shall be held within a tract unless determined otherwise by the Planning Manager. Front lot lines are exempt from the street frontage landscaping requirement. (Ord. No. 06-07)

(a) For all single-family subdivisions, on-site landscaped areas shall consist of street frontage landscaping, required retention and useable open space areas. The required amount of useable open space shall be determined per the Design Review Manual. (Ord. No. 03-182)

b. All portions of the development site not occupied by buildings, structures, vehicle access and parking areas, loading and unloading areas, and approved storage areas shall be landscaped in accordance with the provisions of this Section. Future building pads within a phased development shall be improved with temporary landscaping, and maintained weed and dust free in such a manner as may be approved by the Community Development Director or designee.

c. All required useable open space areas as defined by the Design Review Manual may be included within the on-site landscaped areas.

d. For the purposes of calculating required landscape area, net site area shall exclude rights-of-way, school playfields, and any required landscape buffer. (Ord. No. 03-182) (Ord. No. 04-186)

2. *Street Frontages and Rights-of-Way*

All street rights-of-way classified as collector or higher contiguous with the proposed development or located within the interior of a development not used for street pavement, curbs, gutters, sidewalks, or driveways shall be landscaped in addition to the required on-site landscaped areas listed above. Right-of-way landscaping shall be designed to minimize maintenance issues. (Ord. No. 03-182)

a. The installation of street trees, shrubs, and vegetative ground cover shall be required for projects in an amount equal to or greater than one (1) tree and five (5) shrubs for every twenty-five (25) feet of street frontage, and vegetative ground cover. The shrubs and ground cover shall occupy a minimum of sixty percent (60%) of the total street frontage landscaped area at maturity. Residential subdivisions shall be exempt from this provision where lots front onto a street.

b. The required plantings shall be located in the street right-of-way landscaped area within a minimum five (5) foot wide planter area, or within the front fifteen (15) feet of the required on-site landscape areas, and shall be designed and located to enhance the proposed development project and the streetscape.

c. Such planting requirements shall be in addition to the landscape requirements in Section 14-35-4-A.1. All additional plantings in excess of the requirement may be used to satisfy the on-site landscaping requirements.

d. Future phases of contiguous development shall include street frontage and right-of-way landscaping with the first phase of development. The area and plantings provided for subsequent phases shall count only towards the landscape requirements for the future development. This requirement may be modified for large-scaled projects as approved by the Community Development Director or designee. (Ord. No. 02-95)

3. *Landscape Buffers*

A landscape buffer shall be provided in the manner, context and density specified below:

Landscape Buffer	Single Family Residential District	Multi-Family & other Residential Districts
Non-Residential Districts (O-1, C-1)	20’	20’
Non-Residential Districts (all other)	30’	30’
Multi-Family District (RM-1)	20’	n/r

Landscape Material	Density	Minimum Size at Planting
Trees	3 per 1,000 sq. ft.	24 inch box
Shrubs	5 per 1,000 sq. ft.	5 gallon
Vegetative Groundcover	20% of area	1 gallon
Inert Groundcover	100% of area	¾” (if DG)

[1] For the purposes of this section, the buffer utilized when adjacent to a PAD or PCD development unit or site will be determined on the basis of the land use scheduled or utilized for said area or as otherwise determined by the Planning Manager.

4. *Parking Area Landscaping*

a. Surface Parking

For all developments exceeding fifteen thousand (15,000) square feet of gross floor area, ten percent (10%) of all parking lot areas, exclusive of service drive aisles, shall be landscaped. The requirement for general industrial and manufacturing developments as delineated in Table 14-9-3 or for developments containing fifteen thousand (15,000) square feet or less shall be five percent (5%) of the parking lot area. The parking landscape area shall be located entirely within the exterior curbs of the surface parking area. (Ord. No. 06-07)

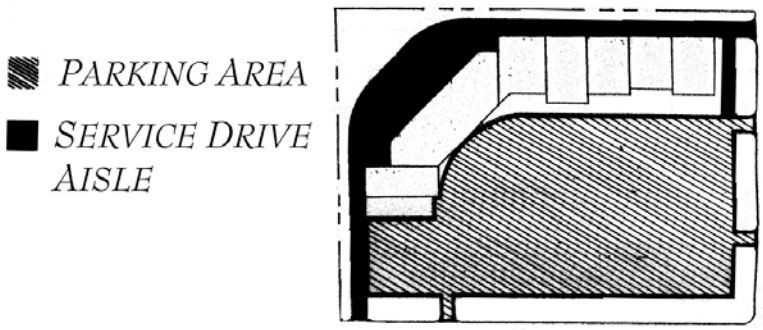

All surface parking areas shall incorporate the following elements:

1) One (1) parking lot island with raised concrete or decorative curbing shall be provided for every eight (8) parking spaces. In addition, landscape islands shall be provided at the end of each parking row. (Ord. No. 03-182)

2) Each landscape island shall be a minimum width of seven (7) feet, measured from back of curb to back of curb and equal the length of the parking stall(s).

3) Landscaped medians shall be provided for all double rows of parking which exceed thirty (30) total spaces. Each median shall be a minimum width of seven (7) feet of which a two (2) foot parking overhang on both sides may be included. Curb breaks may be provided to accommodate drainage flows. A deviation or alternative to this requirement may be considered by the Planning Manager or designee provided the intent of the landscape median is satisfied. (Ord. No. 06-07)

b. Multi-level Parking Structures

For projects that utilize multiple level parking structures, a minimum ten (10) foot landscape area shall be located around the perimeter of the structure.

For projects that utilize both surface and multi-level parking structures, the required parking area landscape shall be the combined requirements of the above.

5. *Parking Landscape Improvements*

a. Surface Parking

1) Surface parking areas shall contain one (1) tree and three (3) shrubs for every parking island (one stall in length).

2) Landscaped parking medians shall contain one (1) shrub for every five (5) linear feet of landscaping. A minimum of one (1) tree shall be provided between landscape islands. Adequate planter area shall be provided to accommodate full tree maturity.

3) All plantings within surface parking areas may be used to satisfy the landscape requirements in Section 14-35-4-A.1. The parking area tree palette shall only include species that provide adequate shading and minimal litter. (Ord. No. 03-182)

4) Shrubs within a landscape island or median shall be maintained to a maximum height of three (3) feet, and all trees at maturity within such planters shall maintain a minimum clearance of six (6) feet from the lowest branch to the adjacent grade elevation.

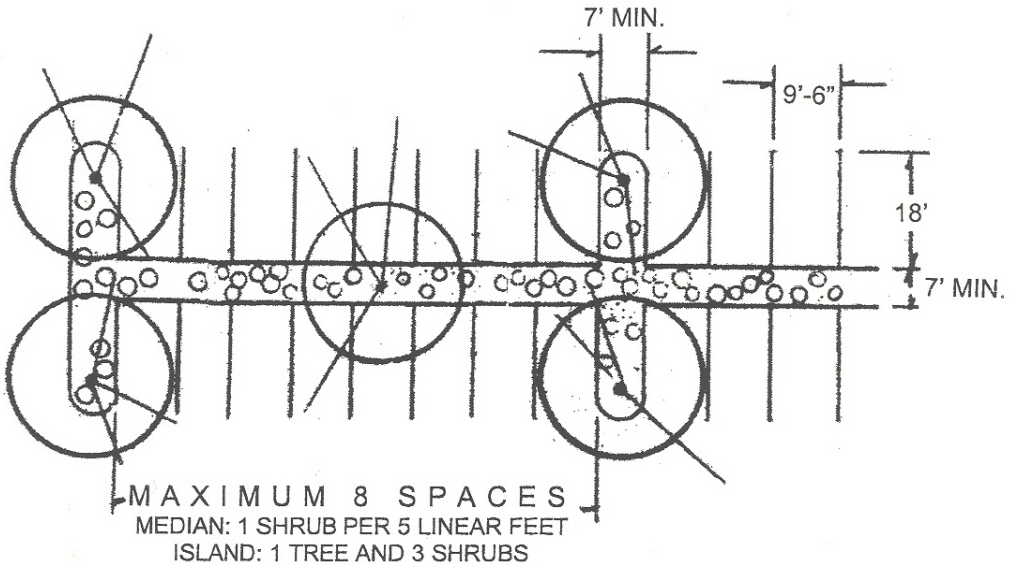

b. Multi-level Parking Structures

The landscape area provided at the perimeter of multiple level parking structures shall contain one (1) tree and three (3) shrubs for every twenty (20) feet of structure perimeter.

6. *Drainage Facilities (Public and Private)*

Drainage facilities shall be completely landscaped with plantings and ground surface materials. Such landscaping shall provide for erosion protection while allowing for the efficient utilization of the structure.

7. *Building Foundation*

Non-residential and multi-family residential buildings shall include a landscape foundation planter with a minimum width of five (5) feet between the building and parking lot. This foundation planter area shall comprise a minimum of fifty percent (50%) of the façade(s) length and may count towards the on-site landscape area requirements. (Ord. No. 03-182) A deviation or alternative to this requirement may be considered by the Planning Manager or designee.

Building foundation planter areas shall include one (1) shrub for every five (5) linear feet. All plantings within building foundation planter areas may be used to satisfy the landscape requirements in Section 14-35-4-A.1. A deviation or alternative to this requirement, including but not limited to, raised planters with seatwalls, decorative planter boxes, potted trees / shrubs, may be considered by the Planning Manager or designee provided the intent of the building foundation planter is satisfied. (Ord. No. 06-07)

B. Design Standards

1. *Minimum Size of Trees and Shrubs*

Unless otherwise specified herein, all required trees shall be a minimum of fifteen (15) gallon in size and at least fifty percent (50%) of those trees must be twenty-four (24) inch box or larger in size. A development may substitute thirty-six (36) inch box trees in place of fifteen (15) gallon trees at a substitution rate of 1.5 trees for every 1 required fifteen (15) gallon tree. All shrubs shall be a minimum of five (5) gallon in size to satisfy the landscape requirements in Section 14-35-4A.2. (Ord. No. 03-182)

All trees shall be of a size at the time of installation to conform with the standards established in the *Arizona Nursery Association Grower's Committee Recommended Tree Specifications*.

2. *Limitation On Use of Turf*

Development projects shall limit the use of turf (lawn) to a maximum of twenty percent (20%) of the lot area. This provision may be waived for those projects as determined by the Site Plan Review process that require a greater amount of turf due to the nature of their use (i.e. schools, parks, golf courses etc.) or those projects that irrigate their landscaping with a reclaimed or private water source. (Ord. No. 03-182)

3. *Substitution of Ground Covers*

Upon approval of the Community Development Director or designee, the installation of twenty (20) square feet of vegetative ground cover in any landscaped area shall substitute for one (1) required shrub, up to a maximum of twenty percent (20%) of the required shrubs in any particular landscaped area. No substitution shall be made for the required shrubs along any street frontage. (Ord. No. 02-95)

4. *Ground Surface Treatment*

All landscaped areas shall be finished with a natural topping material which may include, but not limited to, the following: turf (subject to Section 14-35-4-B.2), ground cover, planting, 3/4" screened decomposed granite (or as approved by plan review) at a 2" minimum depth, river rock, expanded shale, or bark. A pre-emergent herbicide shall be applied to the ground prior to and after the placement of natural surface materials (decomposed granite, river run rock, etc.) in any landscaped area to prevent weed growth. (Ord. No. 2014-21)

5. *Irrigation Standards*

All landscaped areas shall be supported by an automatic irrigation system which may be a spray, flood, or drip type system. A backflow prevention device as approved by the City shall be required with the installation of all irrigation systems. All irrigation systems and landscaped areas shall be designed, constructed, and maintained to promote water conservation and prevent water overflow or seepage onto the street, sidewalk, or parking areas.

A separate water meter shall be installed for landscaping that is installed within the right-of-way and maintained by the City. For developments in which the

property owner is to maintain the right-of-way landscaping, the right-of-way irrigation system shall be separated or isolated from the on-site irrigation system.

6. *Obstructions to Visibility*

   All landscaping and landscaped materials established in close proximity to a driveway or street intersection shall be installed and maintained in compliance with the City's visibility triangle requirements. All ground covers within surface parking areas shall be designed to minimize interference with surveillance capabilities or vehicular and pedestrian circulation.

7. *Protection of Landscaped Areas from Vehicular Damage*

   Permanent containment barriers (concrete curbs or bumper guards) shall be installed and properly secured within or adjacent to all proposed parking areas and along all driveways and vehicular access ways to prevent the destruction of landscape materials by vehicles. All trees and shrubs shall be installed a minimum of two and one-half (2.5) feet from back of curb.

8. *Obstructions of Fire Hydrants*

   All plant materials shall be planted so that at maturity the edge of the plant will be no closer than three (3) feet to any fire hydrant or fire suppression device.

9. *Landscape Screening*

   All mechanical equipment, electrical meters and similar utility devices shall be screened from public view with appropriate plantings.

10. *Trails*

    All trails required by the Rivers and Trails Mater Plans shall include landscaping and hardscape materials as determined by the Community Services Department.

11. *Acceptable Landscape Materials*

    a. Plant materials utilized in landscaped areas in the right-of-way must be included on the most recent edition of the *Phoenix Active Management Area Low Water Using Plant List*.

    b. No artificial plant materials may be used to satisfy the requirements of this Section.

    c. Palm trees shall not be installed within the right-of-way unless the maintenance for the palm trees is provided by the owner.

    d. Pollen producing vegetation such as the Mulberry tree (Morus Alba) or Olive tree (Olea Europea) shall be prohibited per Ordinance 00-20.

SECTION 14-35-5 LAKE PLEASANT PARKWAY SCENIC ROADWAY CORRIDOR

Lake Pleasant Parkway is a unique roadway corridor that traverses areas of recognized scenic quality and natural desert beauty. Sensitive development standards guided by preservation and quality of life objectives provide direction for location of streets and buildings within this corridor. Special standards for development within the corridor reflect the need for sensitive encroachment into the natural desert environment.

A. Scenic Roadway Established

A Scenic Roadway Corridor is established encompassing a width of ¼ mile (1,320 feet) on either side of the centerlines of the following streets:

- Lake Pleasant Parkway, from Rose Garden Lane to the Carefree Highway
- Carefree Highway, from Lake Pleasant Parkway to SR 74
- SR 74, from Carefree Highway to the western limits of the City of Peoria

B. Urban, Suburban and Rural Environments

1. *Urban Sector* - the Urban Sector shall extend from Rose Garden Lane to Happy Valley Road.

2. *Suburban Sector* - the Suburban Sector shall extend from Happy Valley Road to the Agua Fria River crossing on SR 74.

3. *Rural Sector* - The Rural Sector shall extend from the Agua Fria River crossing on SR 74 to the western limits of the City.

C. Development Standards

1. Special landscape setbacks to open view corridors adjacent to the roadways are established as follows. Landscape setbacks are in addition to required street landscaping requirements for the various zoning districts established elsewhere in this ordinance.

   a. The landscape setback for Urban Sector areas shall be 15 feet.

   b. The landscape setback for Suburban Sector areas shall be 30 feet.

   c. The landscape setback for Rural Sector areas shall be 50 feet.

2. Driveways within the special setback areas shall not exceed 20% of the setback.

3. Landscape materials located within the special setback areas shall consist of native plant materials and treatments consistent with the planting context of natural desert areas in the vicinity

SECTION 14-35-6 PLAN SUBMITTAL REQUIREMENTS

A. Conceptual Landscape Plan

1. *Submittal Requirements*

   If these landscape regulations apply to a lot or site that is subject to site plan review as set forth in Article 14-39-9, of this Ordinance, or that is processed as a subdivision plat, then a conceptual landscape plan shall be submitted as part of the Site Plan or Preliminary Plat application.

2. *Plan Format and Content*

   a. Submittals for multi-family and non-residential developments shall conform to the guidelines of the Site Plan and Design Review Process Guide.

   b. Submittals for single-family residential developments shall conform to the guidelines of the Subdivision Development Process Guide.

   c. Process guides are available from the Community Development Department.

3. *Plans Review*

   Conceptual Landscape Plans shall be reviewed for compliance and approved in accordance with the requirements of this Article.

B. Final Landscape Plan Review

1. *Plan Format and Content*

   Final landscape plans shall conform to the guidelines of the Final Landscape Plan Review Process Guide available from the Community Development Department. Final irrigation plans shall be included with the submittal.

2. *Final Landscape Plan Review*

   a. The final landscape plans for multi-family and non-residential development projects shall be submitted with the building permit application and shall be approved prior to the issuance of building permits.

   b. Final landscape plans for subdivisions shall be reviewed by the Planning Division at the time of off-site improvement plan review. Landscaping installation with the public right-of-way shall be subject to the bonding requirements as established by the City.

3. *Plans Review*

   The City shall review final landscape plans for conformance with the approved conceptual landscape plans.

C. Landscape Plan(s) Preparation

All landscape plans submitted to the City for review shall be prepared and sealed by a registered Arizona Landscape Architect. Such regulations are governed by the State of Arizona Board of Technical Registration.

14-35-7 LANDSCAPE INSTALLATION AND MAINTENANCE

A. Landscape Completion

1. Except as otherwise provided in Section 14-35-7-A.2 below, all landscaping must be completed in accordance with the approved landscape plan before a Certificate of Occupancy may be issued for any building on the lot

2. If the property owner provides the Community Development Director documented assurance that the landscaping will be completed within six (6) months, the City may issue one (1), six (6) month temporary Certificate of Occupancy and permit the property owner to complete the landscaping during the six (6) month period. For purposes of this subsection, "documented assurance" means a cash bond, cash deposit, or irrevocable letter of credit in an amount equal to 110% of the cost to install the landscaping and irrigation system (Ord. No. 03-182)

B. Landscape Maintenance

1. *Owner Maintenance*

   a. The property owner and/or Lessee shall maintain all landscape materials both on-site and in the adjacent right-of-way in accordance with the approved landscape plan(s).

   b. Required landscaping must be maintained in a healthy, growing condition at all times. The property owner is responsible for regular weeding, mowing of grass, irrigating, fertilizing, pruning, and other maintenance of all planting as needed. Any plant that dies must be replaced with another living plant that complies with the approved landscape plan within thirty (30) days after notification by the City.

   c. Any damage to utility lines resulting from the negligence of the property owner or his agents or employees in the installation and maintenance of required landscaping in a utility easement or public right-of-way is the responsibility of the property owner. If a public utility disturbs a landscaped area in a utility easement, it shall make every reasonable effort to preserve the landscaping materials and return them to their prior locations after the utility work. If, nonetheless, some plant materials die, it is the obligation of the property owner to replace the plant materials.

   d. Any public land landscaping that does not meet the criteria of Section 14-35-7-B.3 shall be maintained by the owners of the adjacent properties.

2. *City Maintenance of Public Lands*

The City may accept responsibility for the maintenance and operation of landscaping and appurtenances as described by one of the following categories:

a. Equestrian trails and multi-use paths along the AC/DC canal, CAP canal, New River, Agua Fria River, and Skunk Creek corridors.

b. Street rights-of-way abutting municipal public facilities.

c. Flood control facilities which have been accepted for operation and maintenance by the City.

d. Areas identified for City maintenance by the City Council.

3. *Conditions for Accepting Maintenance*

Prior to the City accepting for maintenance any landscaping and appurtenances as described in Section 14-35-7-B.2 above, the following conditions shall have been satisfied:

a. A separate landscape and irrigation plan, prepared in accordance with Section 14-35-6-B, shall be prepared and approved for any area to be considered for City Maintenance. The plans may be part of the same submittal, but on different sheets than landscape and irrigation plans for areas to be maintained by the private property owner.

b. Prior to construction of landscaped areas to be maintained by the City, the owner/developer shall provide cash, certified check, or negotiable bond in an amount sufficient to provide the installation of the landscaping and irrigation system.

c. The landscaping shall be inspected and approved by the City for compliance with the approved landscape plan.

d. The subsequent completion of a ninety (90) day maintenance period wherein the developer shall be responsible for all watering, weeding, and replacement of all dead or dying plant materials.

e. A final inspection called by the developer or his representative at the completion of the ninety (90) day maintenance period resulting in final approval and acceptance by the City.

14-35-8 PERMITS

Permits for landscape and irrigation installation are required for backflow prevention, electrical connections, and all work performed within the public right-of-way.