PLANNING & ZONING COMMISSION
REGULAR MEETING
NOTICE & AGENDA
THURSDAY, JUNE 16, 2011
6:30 P.M.
COUNCIL CHAMBERS
8401 W. MONROE ST.

MUNICIPAL OFFICE COMPLEX
8401 W. MONROE STREET
PEORIA, AZ 85345

PLANNING & ZONING COMMISSION:

Bill Louis, Chair
Nancy Golden, Vice Chair
Leigh Strickman, Secretary
Greg Loper
Gene Sweeney
Veda McFarland
Charles J. Marr

Department Liaison
Chris Jacques

Accommodations for Individuals with Disabilities. *Alternative format materials, sign language interpretation, assistive listening devices or interpretation in languages other than English are available upon 72 hours advance notice through the Office of the City Clerk, 8401 West Monroe Street, Room 150, Peoria, Arizona 85345 (623)773-7340, TDD (623)773-7221, or FAX (623) 773-7304. To the extent possible, additional reasonable accommodations will be made available within the time constraints of the request.*

CONVENE:

ROLL CALL:

OPENING STATEMENT:

CALL TO SUBMIT SPEAKER REQUEST FORMS:

CONSENT AGENDA

CONSENT AGENDA: All items listed with "C" are considered to be routine or have been previously reviewed by the Planning and Zoning Commission, and will be enacted by one motion. There will be no separate discussion of these items unless a Commission member so requests; in which event the item will be removed from the General Order of Business, and considered in its normal sequence on the Agenda.

CONSENT – New Business:

1C **DISPOSITION OF ABSENCE:** None

2C **MINUTES:** Discussion and possible action to approve the minutes of the Meeting held June 2, 2011.

REGULAR AGENDA

NEW BUSINESS:

3R **PUBLIC HEARING:** Conditional Use Permit.

PUBLIC HEARING CU11-0007: Arizona Natural Selections Patient Center is requesting a Conditional Use Permit to allow a medical marijuana dispensary on an Intermediate Commercial (C-2) zoned property. The property is located at the southeast corner of Loop-101 and Peoria Avenue, 9275 W. Peoria Avenue.

Staff Report
Open Public Hearing
Public Comment
Close Public Hearing
Commission Action: Discussion and possible action to recommend approval of a request from Arizona Natural Selections Patient Center for a Conditional Use Permit to allow a medical marijuana dispensary on an Intermediate Commercial (C-2) zoned property.

4R **PUBLIC HEARING:** Conditional Use Permit.

PUBLIC HEARING CU11-0010: Arizona Grown Healthcare is requesting a Conditional Use Permit to allow a medical marijuana dispensary on an Intermediate Commercial (C-2) zoned property. The property is located north of the northwest corner of Lake Pleasant Road and Beardsley Road, 20340 N. Lake Pleasant Road.

Staff Report
Open Public Hearing
Public Comment
Close Public Hearing
Commission Action: Discussion and possible action to recommend approval of a request from Arizona Grown Healthcare for a Conditional Use Permit to allow a medical marijuana dispensary on an Intermediate Commercial (C-2) zoned property.

CALL TO THE PUBLIC: (Non-Agenda Items)

Your comments pertaining to the Planning and Zoning Commission business are welcome. However, if you wish to address the Planning and Zoning Commission, please complete a Speaker Request Form and return it to the clerk before the call to order for this meeting. Boards and Commissions are not authorized by state law to discuss or take action on any issue raised by public comment until a later meeting.

Reports from Staff:

Reports from the Planning and Zoning Commission:

ADJOURNMENT:

NOTE: Documentation (if any) for items listed on the Agenda is available for public inspection, a minimum of 24 hours prior to the Board/Commission Meeting, at any time during regular business hours in the Office of the City Clerk, 8401 W. Monroe Street, Room 150, Peoria, AZ 85345.

PLANNING AND ZONING COMMISSION MINUTES
CITY OF PEORIA, ARIZONA
COUNCIL CHAMBER
JUNE 2, 2011
DRAFT

A **REGULAR Meeting** of the Planning and Zoning Commission of the City of Peoria, Arizona, convened at 8401 W. Monroe St., Peoria, AZ in open and public session at 6:30 p.m.

Members Present: Chair Bill Louis, Vice Chair Nancy Golden, Commissioners Veda McFarland, Leigh Strickman, Charles Marr, Gene Sweeney, and Greg Loper.

Members Absent: None

Others Present: Shawn Kreuzwiesner – Engineering Planning Manager, Steve Burg – Assistant City Attorney, Robert Gubser – Interim Principal Planner, Adam Pruett – Senior Planner, Ed Boik – Planner, and Bev Parcels – Planning Assistant.

Opening Statement: Read by Robert Gubser, Interim Principal Planner.

Call for speaker request forms.

Audience: Fourteen.

Note: The order in which items appear in the minutes is not necessarily the order in which they were discussed in the meeting.

CONSENT AGENDA

All items listed with a "**C**" are considered to be routine by the Planning and Zoning Commission, and were enacted by one motion.

1C **DISPOSITION OF ABSENCE:** Discussion and possible action to approve/excuse the absences of Commissioners Gene Sweeney and Marc Melbo from the March 17, 2011 Meeting.

2C **MINUTES:** Discussion and possible action to approve the minutes of the Regular Meeting held March 17, 2011.

3C **CU11-0008:** Marvel Masonry requested a Conditional Use Permit to allow a home improvement store with outdoor storage in a C-2 zoning district. The property is located at 8060 W. Thunderbird Road.

COMMISSION ACTION: Commissioner Loper moved to approve the Consent Agenda items. The motion was seconded by Commissioner Strickman and upon vote, carried unanimously.

REGULAR AGENDA

NEW BUSINESS:

4R **PUBLIC HEARING - CU11-0003:** SS Services requested a Conditional Use Permit to allow used car sales in conjunction with an auto rental business in a C-4 zoning district. The property is located at 9231 W. Grand Avenue.

STAFF REPORT: Presented by Ed Boik, Planner

COMMISSION COMMENT: Comments included raising the number of allowable cars for sale on the lot.

PUBLIC COMMENT: None

COMMISSION ACTION: Commissioner Sweeney moved to recommend approval of a request from SS Services for a Conditional Use Permit to allow used car sales in conjunction with an auto rental business in a C-4 zoning district with the amendment that 3 cars will be allowed instead of 2. The motion was seconded by Commissioner Loper and upon vote, carried unanimously 7-0.

5R **PUBLIC HEARING - CU11-0005:** Pinnacle Consulting on behalf of T-Mobile requested a Conditional Use Permit to allow a monopalm (approximately 65 feet high) wireless communication facility on a property zoned Multi-Family Residential (RM-1). The property is located at the southwest corner of Olive Avenue and 103rd Avenue.

STAFF REPORT: Robert Gubser, Interim Principal Planner stated that the applicant has withdrawn the case.

COMMISSION COMMENT: None

PUBLIC COMMENT: None

COMMISSION ACTION: No Action Required

6R **PUBLIC HEARING - CU11-0009:** [redacted] requested a Conditional Use Permit to allow for outdoor receptions and special events in conjunction with the existing bed and breakfast operation. The property is located at 8250 W. Monroe Street.

STAFF REPORT: Presented by Robert Gubser, Interim Principal Planner

COMMISSION COMMENT: Comments included frequency of events, noise level, traffic impact, and maximum number of people allowed for outdoor events.

PUBLIC COMMENT:

[redacted] Applicant – Explained the reason for requesting outdoor usage, and discussed the type of activities that would occur at the location.

[redacted] Local Businessman – Discussed business conflict with his business, petition that he had gotten neighbors signatures on, the increase of noise and traffic to the area, and the overall impact that the new business would have on the neighborhood.

[redacted] resident – Has visited the business and is in favor.

[redacted] resident – Has visited the business, feels that no one would complain about the addition of activity, and is in favor.

COMMISSION ACTION: Commissioner Loper moved to recommend approval of a request from Thomas Hunt for a Conditional Use Permit to allow for outdoor receptions and special events in conjunction with the existing bed and breakfast operation. The motion was seconded by Commissioner McFarland and upon vote, carried unanimously 7-0.

7R **PUBLIC HEARING - TA11-0002:** K. Hovnanian Home initiated a text amendment to Article 14-5 Single-Family Residential Districts, Section 14-5-6 *Property Development Standards for Permitted Residential Uses* of the Zoning Ordinance. The amendment proposed to amend the setback and lot coverage development standards within the City of Peoria.

STAFF REPORT: Presented by Adam Pruett, Senior Planner.

COMMISSION COMMENT: None

PUBLIC COMMENT: None

COMMISSION ACTION: Commissioner Sweeney moved to recommend approval of a request from K. Hovnanian Home to amend Article 14-5 Single-Family Residential Districts, Section 14-5-6 *Property Development Standards for Permitted Residential Uses* of the Zoning Ordinance. The amendment would amend the setback and lot coverage development standards within the City of Peoria. The motion was seconded by Commissioner Marr and upon vote, carried unanimously 7-0.

8R **Medical Marijuana Dispensary and Cultivation**

Presentation and discussion of the City's recent medical marijuana zoning ordinance amendment and discussion of the final rules developed by the Department of Health Services.

PRESENTATION: Presented by Ed Boik, Planner.

COMMISSION ACTION: No Action Required

CALL TO THE PUBLIC: (Non-agenda Items): None

REPORT FROM STAFF: Update on changes to the Planning Division staff assignments.

REPORTS FROM THE PLANNING AND ZONING COMMISSION: None

ADJOURNMENT: There being no further business to come before the Planning and Zoning Commission, the meeting adjourned at 8:19 p.m.

_____ _____

William Louis, Chair Date Signed

CONDITIONAL USE PERMIT

REPORT TO THE PLANNING AND ZONING COMMISSION

CASE NUMBER: CU 11-0007

DATE: June 16, 2011

AGENDA ITEM: 3R

Applicant:	[redacted] Arizona Natural Selections
Request:	Obtain a Conditional Use Permit to allow a Medical Marijuana Dispensary
Proposed Development:	Arizona Natural Selections - Medical Marijuana Dispensary
Location:	Southeast corner of Peoria Ave and Loop-101 – 9275 W Peoria Avenue.
Size of Suite:	Approximately 2,000 square foot inline retail unit in an existing retail building.
Support / Opposition:	As of the date of this printing, Staff has not received any written support or opposition to this request.
Recommendation:	**Approve**, with conditions.

AREA CONTEXT

Table 1: *Existing Land Use, Current Zoning. (Exhibits B & C)*

	LAND USE	GENERAL PLAN	ZONING
Subject Property	**Multi-tenant inline retail**	**Community Commercial**	**C-2, Intermediate Commercial**
North	Multi-tenant inline retail	**Community Commercial**	**C-2, Intermediate Commercial**
South	Commercial Retail Center	**Community Commercial**	**C-2, Intermediate Commercial**
East	Commercial Pads	**Community Commercial**	**C-2, Intermediate Commercial**
West	Loop-101, Vacant	**Business Park/Industrial**	**C-2, Intermediate Commercial**

PROJECT DESCRIPTION

Request and Development Details

1. The applicant proposes to locate a Medical Marijuana Dispensary within a vacant 2,000 square-foot tenant space. The dispensary will only offer pre-packaged medical marijuana, edibles and tinctures (alcohol oil concentrate).

2. The site is currently developed as a multi-tenant in-line retail building. There is one tenant—Frazee Paint. Other nearby businesses includes Del Taco, Subway, Burger King and Home Depot.

3. The property is located on the southeast corner of the Loop-101 and Peoria Avenue adjacent. The retail building housing the subject suite is located immediately north of Home Depot.

DISCUSSION AND ANALYSIS

Applicability

4. Medical Marijuana Dispensaries are permitted subject to the issuance of a Conditional Use Permit in the C-2 (Intermediate Commercial) zoning district. Along with the Conditional Use Permit review criteria, a number of specific use standards apply to the proposed use.

5. Section 14-39-10.D of the Zoning Ordinance outlines the applicable criteria for evaluating Conditional Use Permits. In general, the purpose of a CUP is to mitigate any identified negative impacts on the surrounding neighborhood that may result from a specific use and provide controls to ensure maximum compatibility between nearby land uses.

6. Section 14-9-5 of the Zoning Ordinance outlines the applicable use standards for Medical Marijuana Dispensaries which includes standards for security plans, operating hour limitations, business operation limitations and use separation requirements.

Analysis

7. As a relative new use, there are few best practices established for medical marijuana dispensaries. In an effort to better understand the operation and the use, staff visited a number of dispensaries in California and consulted with planning staff of the City of Palm Springs, CA. Through this fact-finding, standards and guidelines were established which the city believes will effectively and appropriately regulate the operations of the dispensary.

8. The applicant proposes to operate 7 days a week from 8AM to 9PM daily. At least four employees will be on site at any one time to assist patients. The number of employees will increase as business dictates to a maximum of 12 employees. This number is exclusive of security personnel.

9. Initially, 25 to 35 patients are expected daily with a maximum of six at any one time. These numbers could increase as business dictates. One patient per employee will be admitted to the medicine room at a time. The capacity of the waiting area will be 15. No outdoor loitering will be permitted.

10. Patients will not have direct access to the medicine room. Once the patient has been verified, a two door "man-trap" will control access to the medicine room.

11. Air filtration and odor control will be addressed by the requirements of the building code. The applicant will install carbon filters/scrubbers or ozone generators if deemed necessary for odor control.

12. Marijuana will be stored in a locked safe during non-business hours and accounted for according to Arizona Department of Health Services (DHS) rules. Items for sale will consist of pre-packed marijuana medicine, edibles, and tinctures in accordance with DHS rules. All sales will occur in the medicine room. Non-cardholders will not be granted access to the medicine room or be able to purchase items.

13. Marijuana refuse will be stored in the safe room for pickup and disposal in accordance with state law and DHS rules.

14. In accordance with City requirements, the applicant has produced a security plan to ensure patient safety and secure operation of the facility. The security plan has been reviewed and accepted by the Peoria Police Department. At least one security officer (licensed, bonded, and in accordance with state law) will be onsite at least 30 minutes prior to opening and 30 minutes after the final patron has left the premises. Security personnel will be responsible for maintaining safety and ensuring that marijuana consumption does not occur in the suite or on-site or in vehicles on the premises. The personnel will also report criminal activity to the Peoria Police Department and prevent loitering.

15. In addition to an onsite security guard, two outdoor cameras and 16 indoor cameras will capture high resolution video of the premises 24 hours a day. All video footage will be stored for at least 60 days in accordance with City requirements.

16. The frontage of the unit will be properly illuminated and the windows will not covered or obscure visibility into the unit. During non-business hours, the windows and doors will be secured with accordion-style security gates. The unit will also have an alarm system.

17. The proposed location meets and exceeds the 500-ft use separation from residentially zoned property and the 1000-ft separation requirement from schools day cares, bars, taverns, liquor stores, and substance abuse treatment centers.

18. In staff's judgment, the proposed use is appropriate and in compliance with the zoning code. The use is compatible with surrounding land uses and the context of the area in question. The use is not expected to generate any additional or undue noise, traffic, light trespass, odor or other impacts on adjacent streets and nearby properties.

19. DHS is not accepting application for dispensaries at this time due to a recent Attorney General request for a declaratory ruling regarding the legality of state employees processing medical marijuana applications. Once this is resolved, the state application process will begin. DHS will regulate the operational aspects of the business as it relates to the composition of the dispensary board, background investigations, operational requirements, data logging and transportation requirements among other things.

20. If any issues arise regarding the operation of the business, Section 14-39-12.I provides the Planning Manager with continuing jurisdiction over all Conditional Use Permits. This means that a permit may be revoked, modified or suspended should any of the following occur:

    a. The permit was obtained by fraud or misrepresentation;

    b. The use authorized by the CUP has been exercised in violation of the conditions of approval;

    c. A change in circumstances where the following has occurred: [1] Impacts from the approved CUP to neighboring properties; and [2] Changes in aesthetic or environmental impacts such as noise, odors or pollution.

    d. The use authorized by the CUP is operated in a manner that constitutes a nuisance to neighboring property owners or is exercised in a manner that is detrimental to the public health, welfare or safety.

21. The security plan was reviewed and accepted by the Police Department. Additionally, the application was routed to Building Safety and the Fire Department who will conduct a more detailed review of the proposal as part of the review of tenant improvement plans.

Noticing and Neighborhood Comment

22. The application notice was forwarded to all property owners within 600 feet of the proposal, including all registered HOA's within one mile, and properly noticed pursuant to Section 14-39-10 of the Peoria Zoning Ordinance.

23. Although no public objections were received, the applicant elected to hold a neighborhood meeting on May 2, 2011. Notice was provided in accordance with Section 14-39-6 of the Zoning Ordinance. Other than the applicant and a member of City staff, no one attended the meeting.

24. As of the date of this writing, no letters or phone calls in support or objection of the proposal have been received.

Proposition 207

25. The voters of Arizona approved Proposition 207, which among other things requires municipalities to compensate property owners for actions which have the effect of diminishing the value of property. The City Attorney's Office has drafted an agreement which waives the applicant's rights to future Proposition 207 claims against the City. Accordingly, the applicant has agreed to furnish a signed and notarized Proposition 207 Waiver.

FINDINGS AND RECOMMENDATION

26. Based on the following findings:

- The proposal meets the Conditional Use Permit standards and complies with the limitations of use for a Medical Marijuana Dispensary;
- The security plan has been reviewed and accepted by the Peoria Police Department;
- The use will be located and will operate in a manner that protects the adjacent properties and businesses from nuisances and is consistent with a retail/service character of the area.

It is recommended that the Planning and Zoning Commission take the following action:

Approve the applicant's request for a Conditional Use Permit under Case CU11-0007, subject to the following conditions:

1. The use shall substantially conform to the project narrative (Exhibit D), security plan (Exhibit E) and floor plan (Exhibit F) as contained in the staff report to the Planning & Zoning Commission dated June 16, 2011.

2. The applicant shall provide the City a copy of the Department of Health Services dispensary certification within six (6) months of the approval of the Conditional Use Permit. Failure to provide the certification will void the Conditional Use Permit.
3. The applicant shall secure any necessary security (video) system and/or alarm system permits from the Peoria Police Department.
4. The applicant shall obtain a sales tax license and properly report.

Attachments:

Exhibit A	Vicinity / Aerial Map
Exhibit B	Land Use Map
Exhibit C	Zoning Map
Exhibit D	Project Narrative
Exhibit E	Security Plan
Exhibit F	Floor Plan

Prepared by: Ed Boik
Planner

Vicinity/Aerial Map

Exhibit A

CU11-0007 Arizona Natural Selections

Applicant: [redacted] Arizona Natural Selections

Request: Conditional Use Permit to allow a Medical Marijuana Dispensary

N

Not to Scale

Land Use Map

Exhibit B

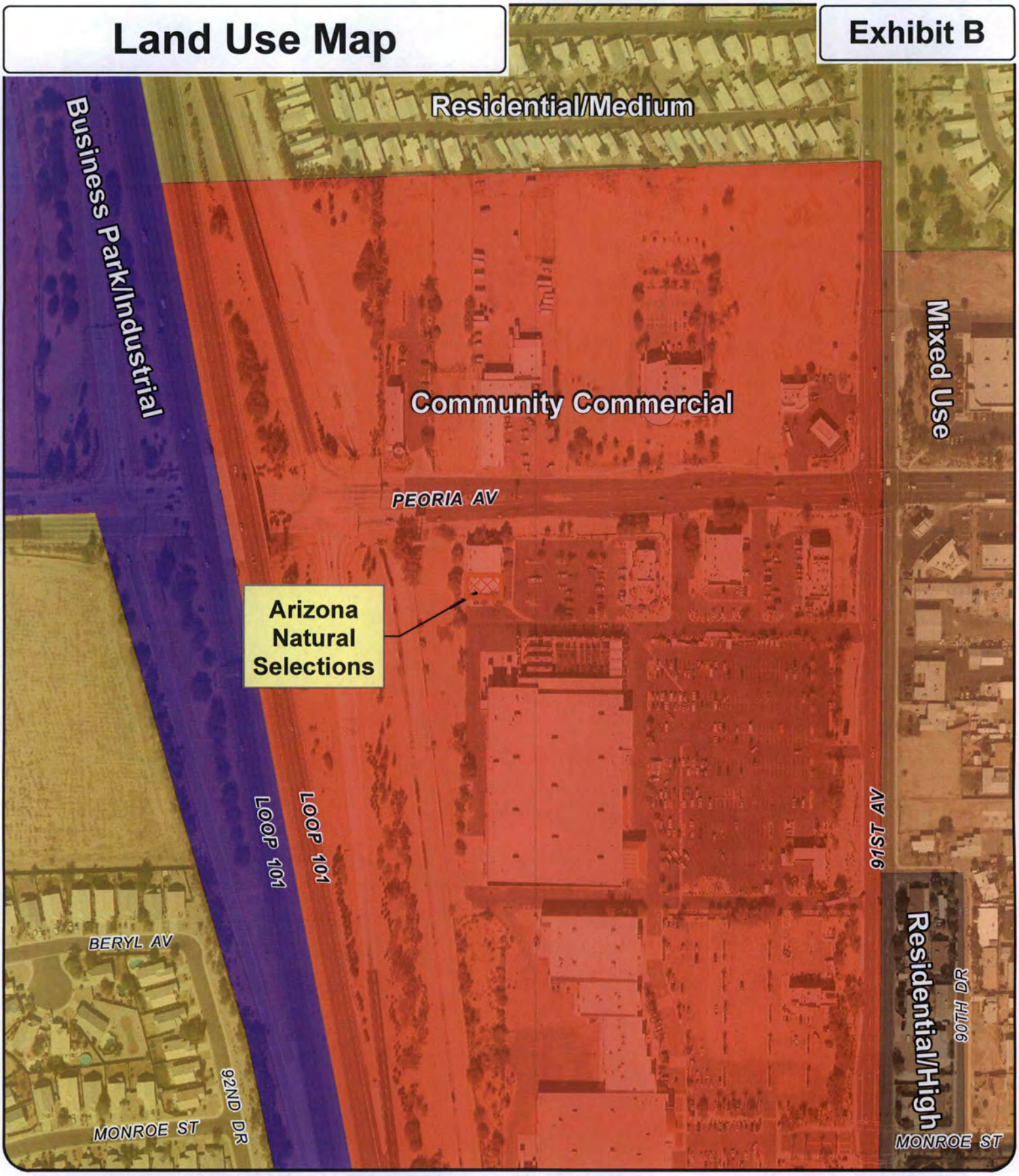

CU11-0007 Arizona Natural Selections

Applicant: [redacted] Arizona Natural Selections

Request: Conditional Use Permit to allow a Medical Marijuana Dispensary

N

Not to Scale

Zoning Map

Exhibit C

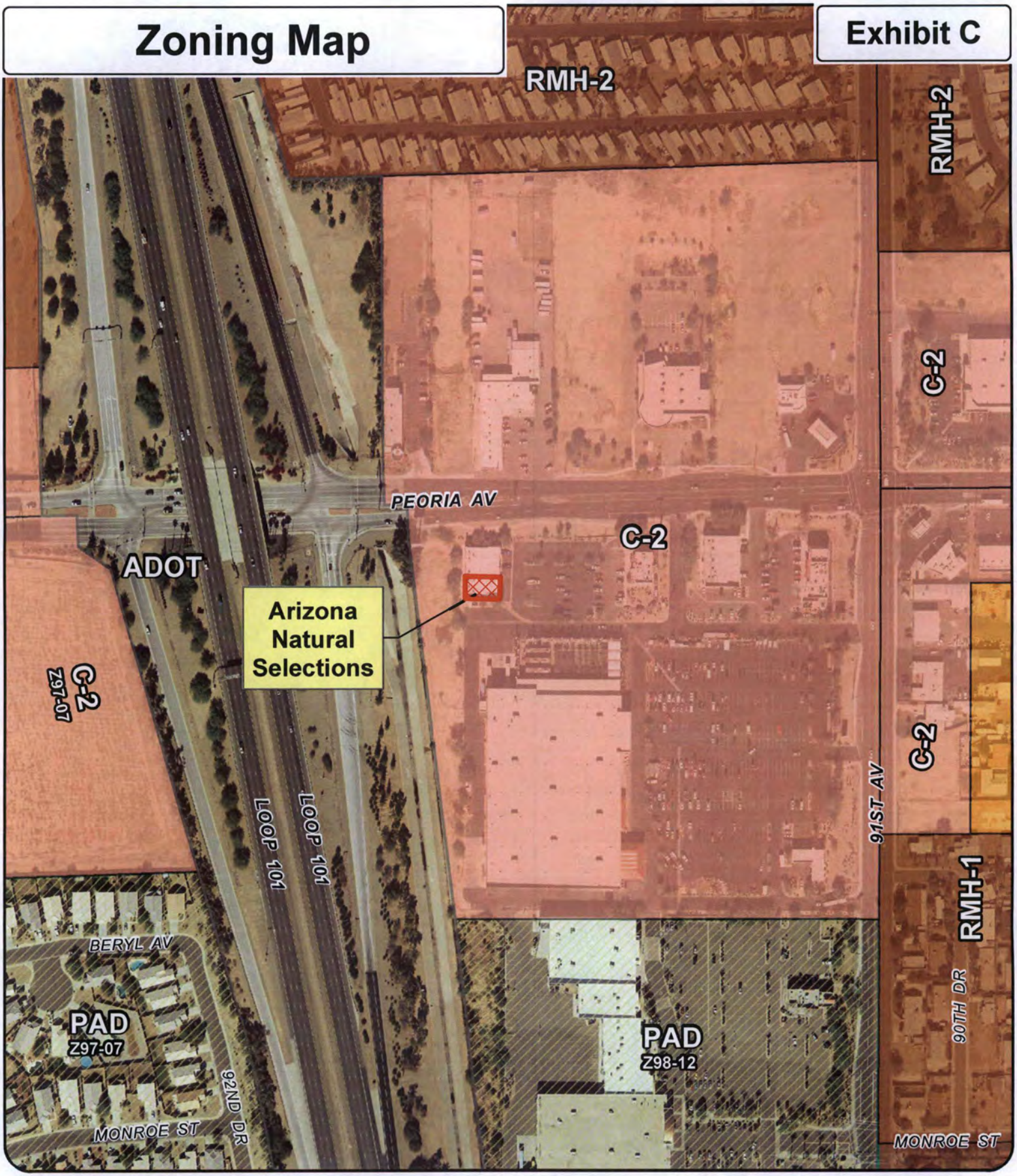

CU11-0007 Arizona Natural Selections

Applicant: [redacted] Arizona Natural Selections

Request: Conditional Use Permit to allow a Medical Marijuana Dispensary

N

Not to Scale

EXHIBIT D

ARIZONA
NATURALSELECTIONS
PATIENT CENTER

Project Description
9275 West Peoria Avenue
Peoria, AZ 85345

Conditional Use Permit
Pre-Application Conference
Project Description

Request for a Conditional Use Permit
for a
Medical Marijuana Dispensary

Prepared for:
Arizona Natural Selections Patient Center of Peoria, Inc.

Arizona Natural Selections Patient Center, Inc.
10115 E Bell Rd #107-204
Scottsdale, AZ 85260

May 5, 2011

RECEIVED
MAY 2011
CUU-0007
2

45263-5

I. Overview

This request is for a Conditional Use Permit for a Medical Marijuana Dispensary facility located at 9275 West Peoria Avenue Peoria, Arizona 85345 (the "Property"). The Property will only serve as a medical marijuana dispensary.

Arizona Natural Selections Patient Center of Peoria, Inc.'s ("ANSPC") goal is to provide a safe system for legal medical marijuana patients to access their medicine, provide educational opportunities to patients and to give back to the community through charitable giving.

In addition to providing patients with a safe environment to obtain the best quality and selection of medicines, ANSPC will also be a resource for patients to learn about alternative medical therapies generally and about the proven benefits of the use of cannabis in various treatment therapies. ANSPC will also support the education of patients by providing access to resources on nutritional counseling, diet and exercise and other holistic and educational endeavors as may be appropriate for its patients from time to time. ANSPC will have a Medical Director who is an Arizona licensed physician on staff at all times.

ANSPC is committed to a site security plan that greatly exceeds the Arizona Department of Health Services ("DHS") security.

The Property is zoned Commercial (C-2).

ANSPC was founded by three (3) local business owners and civic leaders, [redacted] who are each committed to the highest standards in patient care, patient education and community giving while strictly adhering to the Arizona Medical Marijuana Act and the regulations promulgated thereto. In addition, ANSPC has partnered with [redacted] the Emergency Department Medical Director at John C. Lincoln Health Network, to serve as its Medical Director.

II. About The Founders

[redacted] is a transactional attorney in private practice. Kurt focuses his practice on general corporate and securities transactions. [redacted] is licensed to practice law in Arizona and California. [redacted] was named one of the *Phoenix Business Journals* "Forty Under 40" honorees in 2004 and one of *bizAZ's* "Up and Comers" in 2005. [redacted] is very active in the local civic and philanthropic communities. [redacted] was selected to participate in the City of Scottsdale Citizens Commission on Sky Song in 2004, the Downtown Scottsdale Town Hall in 2006 and the Downtown Scottsdale Town Hall in 2008. [redacted] has also been very involved with the *Scottsdale Active 20-30 Club and Foundation*, serving as President of each of the Club (2007-2008) and the Foundation (2008-2009). [redacted] is a graduate of *Scottsdale Leadership Class XVII* and served as President (2007-2008). [redacted] has also been involved with the *Cystic Fibrosis Foundation* and *Make-A-Wish Foundation*. [redacted] is a graduate of

the University of Iowa and the Notre Dame Law School and participated in the Concannon Program of International Law in London, England. [redacted] has previously worked in the British House of Commons and the United States Senate. [redacted] resides in Scottsdale.

[redacted] is a partner with the investment advisory firm of ARMA Financial Services. [redacted] holds Series 7 (General Securities Representative), Series 63 (Uniform Securities Agent State Law) and Series 65 (Uniform Investment Advisor Law) Securities Licenses and is a Registered Investment Advisor. [redacted] oversees all aspects of ARMA including regulatory oversight, organizational and policy development, financial oversight and strategic planning. [redacted] was named one of "The Ten Most Dependable Wealth Managers for Women in the United States" by *Forbes Magazine* in 2008. [redacted] is very active in the community. [redacted] is a co-founder and co-chairman of the *Arizona Marine Corps – Law Enforcement Foundation Golf Tournament* which benefits the *Marine Corps – Law Enforcement Foundation* 501(c)(3) (www. mclef.org). In its six (6) years of operation, the Tournament has raised over $300,000 which has been distributed to the families of fallen Marines and local police officers. [redacted] is also a former Member and Director of each of the *Scottsdale Active 20-30 Club and Foundation* 501(c)(3) and a graduate of *Scottsdale Leadership Class XVIII.* [redacted] is a graduate of Brophy College Preparatory and Arizona State University – W.P. Carey School of Business, Barrett Honors College. He resides in Scottsdale with his wife and two (2) children.

[redacted] is the owner of the Scottsdale Smile Center, a full service general and cosmetic dentistry practice. Scottsdale Smile Center is committed to the highest level of patient care. Scottsdale Smile Center employs the latest technology and a highly qualified staff. [redacted] has held license through the Arizona Board of Dentistry and the Drug Enforcement Agency (DEA) since 2000. [redacted] has a track record of using his skills to give back to the community through such organizations as *Give Back a Smile – Victims of Domestic Violence*, an organization committed to assisting survivors of domestic violence to rebuild their lives and their dignity, *Christina's Smile*, a mobile dental care facility serving children in need and the *Scottsdale Boys and Girls Clubs'* free dental program. [redacted] is also a former member of the *Scottsdale Active 20-30 Club and Foundation.* [redacted] is a graduate of Harding College, the University of Louisville School of Dentistry, and has completed programs in Arts and Humanities at HUF (Florence, Italy) and the MCG/AAID Comprehensive Training Programs in Implant Dentistry at the Medical College of Atlanta. [redacted] resides in Scottsdale with his wife and two (2) children.

III. <u>The Medical Director</u>

ANSPC has partnered with [redacted] to serve as its Medical Director.

[redacted] is the Emergency Department Medical Director at John C. Lincoln Health Network as well as an Emergency Physician and Director with Lincoln Emergency Physicians, Inc.

[redacted] has served as the Emergency Department Medical Director at John C. Lincoln Hospital Deer Valley since 1996 and Chairman of the Department of Emergency Medicine since 1997. [redacted] is distinguished as having served the Deer Valley hospital as Vice Chief of Staff and then Chief of Staff from January 1996 through December of 2003. Along with his very busy agenda, [redacted] has served on several hospital committees. [redacted] earned the Physician of the Quarter award at Phoenix General Hospital (predecessor of JCLDV) in 1993, and was awarded the Outstanding Service Award – Emergency Department during his residency at King/Drew Medical Center in 1992. [redacted] is certified in ACLS and BLS and is a member of ACEP and AzACEP.

IV. General Discussion/Background of Project:

A. Hours of Operation

ANSPC shall comply with the City of Peoria Ordinance No. 2011 (14-9-5(2)(g)) and shall have operating hours not earlier than 8:00 a.m. and not later than 9:00 p.m. The hours of operation are anticipated to be as follows:

	Open	Closed
Monday	8:00 a.m	9:00 p.m.
Tuesday	8:00 a.m	9:00 p.m.
Wednesday	8:00 a.m	9:00 p.m.
Thursday	8:00 a.m	9:00 p.m.
Friday	8:00 a.m	9:00 p.m.
Saturday	8:00 a.m	9:00 p.m.
Sunday	8:00 a.m	9:00 p.m.

B. Number of Employees at Any One Time

ANSPC expects to have a minimum staff of four (4) employees at any one time and depending upon the growth of its patient base and patient flow expectations, may in the future have up to twelve (12) employees at any one time.

C. Number of Patients at Any One Time; Expected Number of Daily Patients

ANSPC expects to be able to serve up to six (6) patients at any one time assuming maximum staff on duty. All patient/Customer Service Agent interaction will be on a one-on-one basis with individual attention given to each patient. ANSPC expects there to be a limited patient base for at least the foreseeable future. Based upon ADHS and business plan estimates, ANSPC expects to service approximately twenty-five (25) – thirty-five (35) patients per day, but ANSPC will have the capacity to comfortably service significantly more patients if the need should arise. Ultimately, the number of patients at any one time or in a day will depend upon the growth of the patient base and the number of dispensaries

which are available to service that patient base. ANSPC has no control over either of these factors.

D. Maximum Number of Patients Allowed in the Medicine Room at Any One Time

Although ANSPC does not anticipate maximum need in the foreseeable future, at maximum employee capacity, ANSPC could have up to twelve (12) patients in the medicine room at any one time. The maximum number of patients in the medicine room at any one time will be limited to one patient for every Customer Service Agent on active duty plus one patient in line for every Customer Service Agent.

E. Capacity of Waiting Area

ANSPC will have ample patient waiting area. ANSPC is committed to providing a comfortable and safe area for patients to wait until they can be personally attended to by a Customer Service Agent. ANSPC's waiting area is designed to ensure that all patients will be able to wait inside the building thus eliminating outside waiting. The expected seating capacity is anticipated to accommodate up to fifteen (15) waiting patients.

F. Air/Odor Filtration Methods

The interior environment of ANSPC will be similar to that of other retail establishments. ANSPC will employ HVAC that is necessary to keep both temperature and humidity at a comfortable level. All product for sale will be in pre-packaged, air tight, bar coded packages ready for immediate sale to qualifying patients, thus eliminating any noticeable odor from the premises. Should further air/odor filtration methods be necessary, ANSPC will take all reasonable efforts to ensure that there are no offending odors. Such measures may include using carbon air filters/scrubbers and/or ozone generators. However, due to the product being in pre-packaged, air tight, bar coded packages, ANSPC believes that additional air/odor filtration methods are unlikely to be unnecessary. ANSPC management has met with City of Peoria staff members regarding the City requirements which will be made pursuant to a ventilation calculation in compliance with International Mechanical Code.

G. Refuse Disposal Methods

ANSPC's refuse disposal plan begins with a thorough inventory control plan. All retail products for sale will be in pre-packaged, air tight, bar coded packages ready for immediate sale to qualifying patients. There may, however be a limited amount of sample product that will be available for inspection by patients that will not be in pre-packaged, air tight, bar coded packages. These samples will not be for sale. There will be no medical marijuana or derivatives disposed of in

public refuse containers at the site. Any marijuana derived refuse will be stored in the Safe Room prior to proper disposal. Any refuse disposal related to medical marijuana or its derivatives will be disposed of by a third party vendor or transported back to the off-site cultivation facility for proper disposal, each in accordance with Title 36, Chapter 28.1 of the Arizona Revised Statutes, and/or Title 9, Chapter 17, Article 3 of the Arizona Department of Health Services. All sensitive documents, including, but not limited to, patient records, will be shredded on-site and properly disposed. Only standard waste associated with a retail facility (paper products, etc.) will be disposed of at the facility. Please refer to the attached Public Safety and Refuse Control Plan.

H. Describe Business Operation Policy with Regard to Where Product Is Stored, Sold, and How On-Premise Use of the Product Will Be Prevented

All product will be stored after hours in locked safe(s). The safes will be in sufficient volume to securely contain all medical marijuana and medical marijuana products on the premises. It is the intent of ANSPC to only have limited product in the retail dispensary for operational needs. All medical marijuana and medical marijuana products will only be sold in the separated secure retail sales area. The retail sales area is separated from the patient check in and waiting areas by double secured, locked and electronically encrypted coded doors. On-premise consumption of any medical marijuana products is expressly prohibited by Arizona Revised Statutes, Title 36, Chapter 28.1. It is the primary responsibility of the security team to prevent such use. The security team will patrol within and without the building, including adjacent areas, parking lots and automobiles within parking lots, to ensure that there is no consumption of medical marijuana products in the dispensary area. Please refer to attached Public Safety and Refuse Control Plan.

I. Parking

The Property (including adjacent business(es)) has a total square footage of 6,000 square feet. The intended dispensary will be 2,000 square feet. The Property has a total of sixty-two (62) parking spaces. Pursuant to Article 14-23 of the Parking and Loading Requirements of the City of Peoria, General Retail requires one (1) space per 300 square feet of floor space. This ratio was confirmed by Ed Boik on March 31, 2011. Based upon this ratio, the total Property requires twenty (20) parking spaces. The sixty-two (62) spaces provided at the Property far exceeds the requirement in the regulations.

J. Products For Sale

ANSPC's core business plan currently anticipates the sale of pre-packaged marijuana products, including natural form marijuana, edibles and tinctures only; however ANSPC remains flexible to meeting the needs of its patients through the

sale of additional related products should the future need arise. The sale of all product will be fully in accordance with Arizona law.

V. Discussion of Anticipated Security Plan/Measures

A. The Use of On-Premise Security Personnel

ANSPC will utilize on-premise security personnel. To the extent required by the City Code of the City of Peoria, ANSPC will contract with a security company that provides security guards whom are licensed and duly bonded security personnel pursuant to Arizona Revised Statutes 32-601. Security guards will be on-duty one half hour before the commencement of business hours until one half hour closing of business hours. Please refer to attached Public Safety and Refuse Control Plan.

B. Transportation Security Measures

All medical marijuana products will arrive at the dispensary securely delivered by an unmarked vehicle. The product will be transported directly from the vehicle and to the interior of the dispensary where it will be unloaded in the secured area of the dispensary. While enroute from the vehicle to the entrance of the dispensary, the product shall be accompanied by the exterior security guard. Pursuant to Title 9. Health Services, Chapter 17. Department of Health Services – Medical Marijuana Program Unofficial Regulations 3/28/11, Article 3, R9-17-318 or regulations promulgated thereafter; transportation of marijuana and marijuana products shall include the following:

1. Complete a trip plan that includes:

    a. The name of the dispensary agent in charge of transporting the marijuana;
    b. The date and start time of the trip;
    c. A description of the marijuana, marijuana plants, or marijuana paraphernalia being transported; and
    d. Anticipated route of transportation; and

2. During transportation, a dispensary agent shall:

    a. Carry a copy of the trip plan with the dispensary agent for the duration of the trip;
    b. Use a vehicle without any medical marijuana identification;
    c. Have a means of communication with the dispensary; and
    d. Ensure that the marijuana, marijuana plants, or marijuana paraphernalia is not visible

3. After transportation, a dispensary agent shall enter the end time of the trip and any changes to the trip plan.

4. The dispensary shall:

   a. Maintain a copy of the above requirements, and
   b. Provide a copy of the documents to the Department of Health Services for review upon request.

C. Secured Entrances

Please refer to the attached Public Safety and Refuse Control Plan and Site Plan illustrations.

D. Cameras and Video Retention Plans

Please refer to the attached Public Safety and Refuse Control Plan and Site Plan illustrations.

K. Other Proposed Security Techniques

Please refer to the attached Public Safety and Refuse Control Plan and Site Plan illustrations.

L. Pursuant to City of Peoria Ordinance No. 2011, Article 14-9 Non-Residential Districts

14-9-5 Limitations On Uses

M. Medical Marijuana Dispensaries and Manufacturing or Cultivation Facilities (Ord No.11-##)

1. General Requirements

a. For the purposes of measuring separation distances, the measurements will be taken in a straight line from the exterior wall of the building or suite housing the use without regard to intervening buildings or political boundaries.

All measurements for the purposes of measuring separation distances of ANSPC have been taken in a straight line from the exterior wall of the building or suite housing the use without regard to intervening buildings or political boundaries.

b. Medical Marijuana remnants or by-products shall be disposed of according to an approved plan and not placed within the facility's exterior refuse containers.

All medical marijuana remnants or by-products of ANSPC shall be disposed of according to an approved plan and not placed within the facility's exterior refuse containers.

c. There shall be no emission of dust, fumes, vapors or odors into the environment from the premise.

ANSPC shall emit no emission of dust, fumes, vapors or odors into the environment from the dispensary.

d. Signage for Dispensary and/or Medical Marijuana Cultivation Facilities shall be limited to the name of the business only, and no advertising of the goods and/or services shall be permitted.

ANSPC shall limit its signage for the dispensary to the name of the business only. ANSPC signage will not advertise its goods and/or services.

e. Medical Marijuana Dispensaries and Cultivation Facilities shall be located in a permanent building on an established foundation adhering to Peoria building codes and shall not include any temporary, portable, or self powered mobile facilities.

ANSPC's location is in a permanent building on an established foundation that adheres to Peoria's building codes and does not include any temporary, portable, or self-powered mobile facilities.

f. An active Security Management Plan shall be approved by the Police Department. The Plan shall include, but is not limited to, the following:

ANSPC will have an active Security Management Plan that is approved by the Police Department. The Security Management Plan will include, but is not limited to, the following:

1. Security Cameras shall be installed and maintained in good condition, and used in an on-going manner. Recordings shall be retained for a minimum of 60 days and comply with any additional standards defined by the Security Management Plan.

ANSPC will install and maintain security cameras in good condition. Security cameras will be used in an on-going manner. All recordings will be retained for a minimum of 60 days and will comply with any additional standards defined by

the Security Management Plan. Please refer to the attached Public Safety and Refuse Control Plan and site plan illustrations.

> ***2. The business space shall be alarmed with an alarm system that is operated and maintained by a recognized security company.***

ANSPC's dispensary premise will be alarmed with an alarm system that is operated and maintained by a recognized security company. Please refer to the attached Public Safety and Refuse Control Plan and site plan illustrations.

> ***3. A security guard shall be provided at the main entrance during all hours of operation. For the purposes of this section, "security guard" shall mean licensed and duly bonded security personnel registered pursuant to A.R.S. §§32-601.***

To the extent required by the City of Peoria, ANSPC will provide a security guard at the main entrance of the dispensary during all hours of operation. The security guard will be licensed and duly bonded security personnel registered pursuant to A.R.S. SS 32-601. Please refer to the attached Public Safety and Refuse Control Plan.

2. Medical Marijuana Dispensaries

> ***a. Vehicular access into the center or site containing the dispensary shall be from an arterial roadway.***

ANSPC's dispensary location has access to the premises, center or site from an arterial roadway.

> ***b. The use shall not be located within 2,640-feet of another Medical Marijuana Dispensary or Medical Marijuana Manufacturing or Cultivation facility.***

ANSPC's dispensary location is not located within 2,640 feet of another known medical marijuana dispensary or medical marijuana manufacturing or cultivation facility.

> ***c. The use shall not be located within 1,000-feet of the property line of Day-Care Facilities, Pre-Schools, Public/Charter or Private Schools.***

ANSPC's dispensary location is not located within 1,000 feet of the property line of day-care facilities, pre-schools, public/charter or private schools.

d. The use shall not be located within 1,000-feet of a Retail Liquor Store; Tavern, Bar or Lounge; Adult Use; Substance Abuse Treatment Centers; or State Local Alcohol Reception Center.

ANSPC's dispensary location is not located within 1,000 feet of a Retail Liquor Store, tavern, bar or lounge, substance abuse treatment center, or state local alcohol reception center.

e. The use shall not be located within 500-feet of the property line of a residentially-zoned property.

ANSPC's dispensary location is not located within 500 feet of the property line of a residentially zoned property.

f. The product offered for retail sales to Medical Marijuana Cardholders shall be inaccessible to the public entering the Medical Marijuana Dispensary. All product provided for retail sales shall be located behind a counter staffed by a Nonprofit Medical Marijuana Dispensary Agent as defined by A.R.S. SS 36-2801.et.seq.

ANSPC's products offered for retail sale to medical marijuana cardholders will be inaccessible to the public entering the medical marijuana dispensary. All products offered for sale will be located behind a counter staffed by a nonprofit medical marijuana dispensary agent as defined by A.R.S. SS 36-2801.et.seq.

g. The dispensary shall have operating hours not earlier than 8:00 a.m. and not later than 9:00 p.m.

ANSPC will have operating hours not earlier than 8:00 a.m. and not later than 9:00 p.m.

h. The Cultivation of Marijuana is prohibited.

ANSPC's dispensary location is a retail facility only. There will be no cultivation on the premises.

i. Delivery services are prohibited.

ANSPC's dispensary location will not have delivery services.

j. Drive-through services and sales are prohibited.

ANSPC's dispensary location will not have drive-through services.

k. Alcoholic beverages shall not be sold, stored, distributed or consumed on the premises.

ANSPC's dispensary location will not sell, store, distribute or allow consumption of alcoholic beverages on the premises.

l. The Dispensary shall not have outdoor seating areas, but shall have adequate indoor seating to prevent outside loitering.

ANSPC's dispensary location will not have outdoor seating areas. ANSPC's dispensary location will have adequate indoor seating to prevent outside loitering.

m. The business entrance and all window areas shall be illuminated during evening hours and shall comply with the City's lighting standards regarding fixture type, wattage, illumination levels, shielding etc.

ANSPC's dispensary location business entrance and all window areas will be illuminated during evening hours and will comply with the city's lighting standards regarding fixture type, wattage, illumination levels, shielding etc.

n. The windows and/or entrances shall not be obstructed and must maintain a clear view into the premises during business hours.

ANSPC's dispensary location windows and/or entrances will not be obstructed and will maintain a clear view into the premises during business hours.

o. The use shall provide a plan to ensure that no consumption of Marijuana or any product containing Marijuana occurs on the premises of a Medical Marijuana Dispensary.

ANSPC's dispensary location will provide a plan to ensure that no consumption of marijuana or any product containing marijuana occurs on the premises. Please refer to the attached Public Safety and Refuse Control Plan.

p. Tenant improvement plan shall ensure that ventilation, air filtration, building and design standards are compatible with adjacent uses and the requirements of adopted building codes.

ANSPC's tenant improvement plan will ensure that ventilation, air filtration, building and design standards are compatible with adjacent uses and the requirements of adopted building codes.

3. Medical Marijuana Manufacturing or Cultivation Facility.

a. Other than for delivery to an authorized Medical Marijuana Dispensary, distributing, transmitting, dispensing, giving, selling, or providing medical Marijuana is prohibited.

ANSPC's dispensary location is a retail facility only. There will be no manufacturing or cultivation on the premises.

b. All cultivation, manufacturing, and storage of Marijuana and Marijuana plants shall occur within secured, enclosed buildings and structures.

ANSPC's dispensary location is a retail facility only. There will be no manufacturing or cultivation on the premises.

c. The use shall not be located within 2,640-feet of another Medical Marijuana Manufacturing or Cultivation Facility.

ANSPC's dispensary location is a retail facility only. There will be no manufacturing or cultivation on the premises.

d. The use shall not be located within 1,000-feet of the property line of Day-Care Facilities, Pre-Schools, Public/Charter or Private Schools.

ANSPC's dispensary location is a retail facility only. There will be no manufacturing or cultivation on the premises.

e. The use shall not be located within 500-feet of the property line of a residentially-zoned property.

ANSPC's dispensary location is a retail facility only. There will be no manufacturing or cultivation on the premises.

f. There shall be no signage advertising the location of Medical Marijuana Dispensaries or retail sales of Medical Marijuana on the premises.

ANSPC's dispensary location is a retail facility only. There will be no manufacturing or cultivation on the premises.

g. The Community Development Director may require additional ventilation and air filtration necessary to ensure compatibility with adjacent uses.

ANSPC's dispensary location is a retail facility only. There will be no manufacturing or cultivation on the premises.

EXHIBIT E

ARIZONA NATURALSELECTIONS PATIENT CENTER

Project Description
9275 West Peoria Avenue
Peoria, AZ 85345

City of Peoria
Public Safety and Refuse Control Plan For Security, Maintenance and Operation of Arizona Natural Selections Patient Center of Peoria

Prepared for:
Arizona Natural Selections Patient Center of Peoria, Inc.

Arizona Natural Selections Patient Center, Inc.
10115 E Bell Rd #107-204
Scottsdale, AZ 85260

May 5, 2011

RECEIVED
MAY 2011
CU11-0007
2

45264-5

I. Purpose of the Plan

This Public Safety and Refuse Control Plan's (this "Plan") purpose is to address security measures, maintenance, refuse and operations for Arizona Natural Selections Patient Center of Peoria ("ANSPC"). The contents of the Plan will address community concerns regarding:

- Compatibility with surrounding structures and uses;
- Dispensary security and patient safety; and
- Waste disposal measure relating to the dispensing of medical marijuana.

II. Community Cooperation/Complaints/Concerns:

ANSPC will maintain communications with other business establishments, organizations, and residents located on and adjacent to the premises, and with residents and other businesses that may be affected by patrons or operations of ANSPC. ANSPC designates the following individuals to receive and respond to concerns or complaints from other residents or businesses:

- [redacted]

ANSPC, its managing members, managers, supervisors and security personnel will cooperate closely with Peoria Police, City of Peoria Code Enforcement staff or other City staff as well as business and residential neighbors in addressing and investigating complaints, criminal acts, refuse issues and any other concerns.

III. Security and Maintenance

1. On-Premise Security Personnel

a. ANSPC will utilize on-premise security personnel. To the extent required by the City Code of the City of Peoria, ANSPC will contract with a security company that provides security guards whom are licensed and duly bonded security personnel pursuant to Arizona Revised Statutes 32-601. Security guards will be on-duty one half hour before the commencement of business hours until one half hour closing of business hours. Please refer to attached Public Safety and Refuse Control Plan.

2. Security Attire

ANSPC's Security Plan is based on deterring threats before they occur through highly capable and visible security personnel, and security equipment. This Security Plan will include security personnel that will be readily available at all times to police, patients and employees. Safety is the top priority at ANSPC, and we will take all reasonable efforts to ensure that patients, employees, and our community are kept from harm's way at all times.

The Plan has been designed to warmly greet visitors, yet deter threats by their visible presence. Security personnel will be highly trained, experienced and alert. In addition, ANSPC will issue photo ID cards to all agents (employees) of ANSPC and each agent will be required to wear such ID cards on the front of their clothing at all times while on duty at the ANSPC facility. Employees will be trained to be alert to strangers on the premises and to question anyone without proper ID. Those who refuse to comply will be escorted from the ANSPC facility, and the security personnel will be immediately notified. The security personnel will address any encountered difficulties and bring those difficulties to the attention of local police if the situation warrants a higher level of response.

3. Security Officer Responsibilities

a. The proposed Security Patrol Plan will begin 30 minutes prior to opening hours and for 30 minutes following the final patron's departure from the premises.

b. Security officer(s) will be responsible for identifying hazards, problems, and maintaining guest safety.

c. Security officer(s) will be responsible for ensuring that no persons are consuming marijuana within the dispensary and on the premises, including the parking lot or within vehicles in the parking lot.

d. In addition, security officers will report all acts of criminal activity to management personnel, complete a written report, log the act of criminal activity, and report the act to the Peoria Police Department immediately.

4. Management Responsibilities – ANSPC shall delineate the below responsibilities to all managers, assistant managers, and person(s)-in-charge and ensure these responsibilities are understood and followed.

   a. The manager(s) shall ensure that all employees and security staff employed by ANSPC be trained and knowledgeable about the contents of this Plan. The following shall be agreed upon and adhered to:

   b. There will be a minimum of one (1) manager available during all operational hours.

   c. At least one (1) manager shall be identified as "Security Manager" for the dispensary and be responsible for ensuring that a safe environment exists for the supervision of all security personnel and that all security personnel as identified here shall meet or exceed the requirements established by A.R.S. 32-2621 through A.R.S. 32-2636, as amended, relating to security personnel and guards, and any regulation issued pursuant thereto.

IV. Refuse Plan

It is ANSPC's responsibility to ensure refuse containers are properly used and the area in and around the business is kept clean. Waste associated with the medical marijuana, including seeds, stems leaves oils, etc. shall be disposed of in accordance with Title 36, Chapter 28.1 of the Arizona Revised Statutes, and/or Title 9, Chapter 17, Article 3 of the Arizona Department of Health Services.

ANSPC's refuse disposal plan begins with a thorough inventory control plan. All retail products for sale will be in pre-packaged, air tight, bar coded packages ready for immediate sale to qualifying patients. There may, however be a limited amount of sample product that will be available for inspection by patients that will not be in pre-packaged, air tight, bar coded packages. These samples will not be for sale. There will be no medical marijuana or derivatives disposed of in public refuse containers at the site. Any refuse disposal related to medical marijuana or its derivatives will be disposed of by a third party vendor or transported back to the off-site cultivation facility for proper disposal, each in accordance with Title 36, Chapter 28.1 of the Arizona Revised Statutes, and/or Title 9, Chapter 17, Article 3 of the Arizona Department of Health Services. All sensitive documents, including, but not limited to, patient records, will be shredded on-site and properly disposed. Only standard waste associated with a retail facility (paper products, etc.) will be disposed of at the facility.

All employees will receive thorough, consistent training about inventory management. ANSPC's dispensary will use a secure point-of-sale (POS) system. Medicine coming from the cultivation or processing site will be inventoried against this system upon arrival. Management will conduct random audits. If physical inventory counts do not match the inventory counts recorded in the POS system the ANSPC Inventory Manager will document the incident in a report that includes the following information: the date, name of people involved, a description of the incident(s), identification of known or

suspected cause(s) for the event(s), and any corrective action(s) taken. If there is a reduction in inventory that is due to suspected criminal activity, ANSPC shall report the incident and/or the agent to the Arizona Department of Health Services ("DHS") and to local law enforcement authorities.

V. Establishment Record Keeping

In addition to those requirements spelled out in Title 9, Chapter 17, Article 3 of the DHS Regulations, ANSPC shall retain all video surveillance recordings no less than 60 days. Records include all audio recordings, video recordings, written receipts invoices and evidence of any transaction occurring within or without the establishment that are related to the dispensary.

ANSPC has developed a stringent and comprehensive records and inventory control system that integrates with DHS's internal medical marijuana electronic verification system. ANSPC's system is also fully integrated with our security system, Point of Sale system, video surveillance system and inventory tracking system.

This system creates a transparent chain-of-command and inventory control systems for internal staff, provide transparent records for review by DHS, the City of Peoria Police Department and prevent abuse of medicine and diversion by staff or patients/caregivers, and reduce the probability that ANSPC will be a target for or source of crime in our community.

ANSPC will maintain all records for at least 60 days on a secured offsite server that include all video recordings, the name of the registered patient or caregiver to whom medical cannabis was dispensed, the date, the quantity, the form of medicine and the price. ANSPC's records shall also indicate any medical marijuana equipment that has been sold or distributed.

Regular review and audit of these policies and programs will prevent unlawful activities and ensure that ongoing improvements are implemented.

VI. Physical Security

ANSPC will utilize the following security features throughout the premises:

1. Video Surveillance

   - In addition to those requirements spelled out in Title 9, Chapter 17, Article 3 of the Arizona Department of Health Services, ANSPC will install and utilize 24- hour surveillance and hardened video lines that record to a secure on or off-site location, and that ANSPC can provide to the Arizona Department of Health Services or Peoria Police Department upon request.

   - Video surveillance will record all persons who enter the dispensary.

   - Video surveillance will cover all patron areas.

ANSPC's video surveillance system utilizes a digital surveillance system that will be installed inside and outside the facility. The Plan will incorporate the use of infrared security cameras with digital video recorders, fire and motion detectors. ANSPC's closed circuit television system is designed to exceed the state's current standard for video surveillance requirements for medical marijuana dispensing sites. This type of advanced system allows for the 24 hour monitoring of both employees and patients, which gives ANSPC the ability to record all actions that are taking place. Video surveillance will record all persons who enter the facility. This video will also be stored for at least 60 days.

CCTV equipment will include the following (or similar):

- 600TVL CNB Color Vandal Dome Cam, Sony ICR, 2.9-10mm
- 24 VAC 9-Channel Camera Power Supply Panel
- DVR Camera & Web Server
- UPC Battery Backup
- Offsite Failure and communication monitoring

ANSPC's Security Plan puts forth all reasonable efforts to ensure that patients, employees, visitors, and our community are kept from harm's way at all times. The Plan is based on deterring threats before they occur through a highly capable and visible security personnel, and security equipment. Unlawful activity will be prevented through the use of window security, if required, shutters, cameras mounted in plain sight, security warning signs, access control policies and systems, video surveillance monitoring, intrusion detection, alarm monitoring service, and controlled accesses locks. All controlled access locks will be tied to the fire alarm system to allow fire department access in case of a fire emergency. A critical feature of the proposed Security Plan includes a comprehensive audit trail of all security related operations.

ANSPC has engaged with a reputable security company to administer our interior and exterior monitoring and safety program. Access restriction devices will be used on all regulated areas. All facilities will adhere to ADA standards for access and safety for our patients in the event of an emergency.

There is only one publicly assessable point of access into the dispensing facility which will be secured using three (3) types of measures. These security measures include: physical, video surveillance and administrative.

2. Lighting

All interior and exterior lighting will be sufficient to assure reasonable security for all patients and will be in compliance with City of Peoria Code and regulations.

3. Method of Providing Secured, Controlled Access to the Medicine Room.

   The entrance to the medicine room will have a vestibule which will feature double secured doors to entry pursuant to the request of Ron Beene, Senior Fire Plans Examiner, the door will also have manually activated panic bars for exit. Please see draft floor plan.

4. Windows and doors containing glass will be secured with mounted accordion style security gates during non-business hours.

VII. Access to Employee Areas

Restricted areas will be protected with doors that have been equipped with independent access control locks and will remain closed at all times except when in use by an authorized employee. ANSPC will issue photo ID cards to all agents of ANSPC and each agent will be required to wear such ID cards on the front of their clothing at all times while in the ANSPC facility. Employees will be trained to be alert to strangers on the premises and to question anyone without proper ID. Those who refuse to comply will be escorted from the ANSPC facility, and the Security Manager immediately notified. The Security Manager will address any encountered difficulties and bring it to the attention of local police if the situation warrants a higher level of response.

VIII. Dissemination of the Security Plan

1. A copy of this Plan must be provided to each security officer, manager(s) and assistant manager(s) employed by ANSPC.

2. A reading log will be maintained and will be signed by each of the above persons, stating they have read and understood this Plan. Each employee must read the Plan once per year, or when there are any changes to the Plan.

3. A current copy of this Plan will be maintained on the premises at all times, and a copy of this Plan will be made available upon request of any code enforcement officer or police officer.

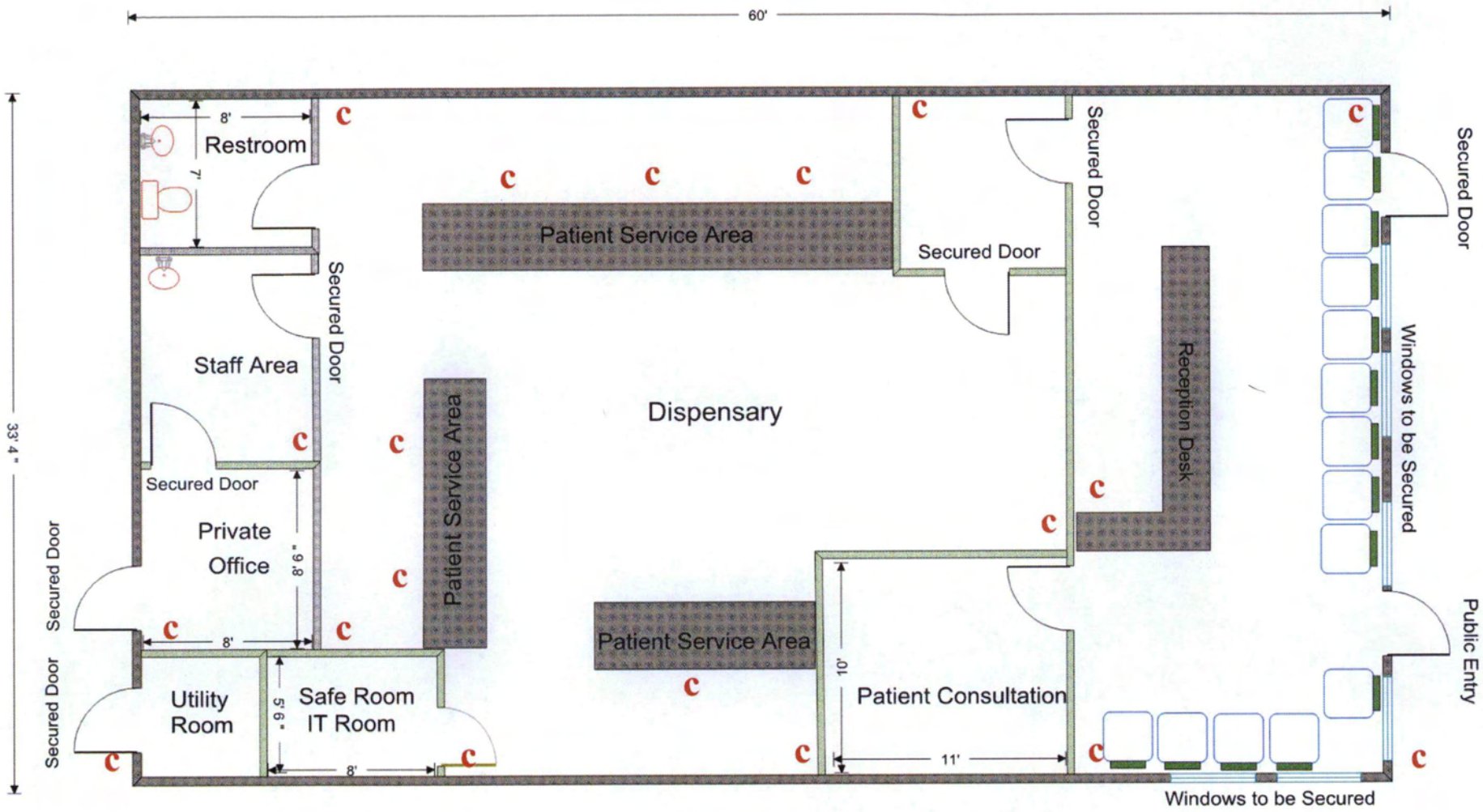

Arizona Natural Selections Patient Center of Peoria, Inc.
9257 West Peoria Avenue Peoria, Arizona 85345
Floor Plan Concept Subject to Change

c-camera

EXHIBIT F

CONDITIONAL USE PERMIT

REPORT TO THE PLANNING AND ZONING COMMISSION

CASE NUMBER: CU 11-0010

DATE: June 16, 2011

AGENDA ITEM: 4R

Applicant:	[redacted] Arizona Grown Healthcare
Request:	Obtain a Conditional Use Permit to allow a Medical Marijuana Dispensary
Proposed Development:	Arizona Grown Healthcare - Medical Marijuana Dispensary
Location:	North of the northwest corner of Beardsley Road and Lake Pleasant Road, specifically 20340 N Lake Pleasant Rd.
Size of Suite:	1,631 square foot inline retail unit in an existing retail building.
Support / Opposition:	As of the date of this printing, Staff has not received any written support or opposition to this request. Staff has received one inquiry via phone.
Recommendation:	**Approve**, with conditions.

AREA CONTEXT

Table 1: *Existing Land Use, Current Zoning. (Exhibits B & C)*

	LAND USE	GENERAL PLAN	ZONING
Subject Property	**Multi-tenant inline retail**	**Low Density Residential (2-5 du/ac, target 3)**	**C-2, Intermediate Commercial**
North	Multi-tenant inline retail / Office	**Low Density Residential (2-5 du/ac, target 3)**	**O-1, Office Commercial**
South	Walgreens Pharmacy	**Low Density Residential (2-5 du/ac, target 3); Sun City south of Beardsley**	**C-2, Intermediate Commercial; Maricopa County/Sun City:**
East	Commercial Retail Center (Bashas')	**Low Density Residential (2-5 du/ac, target 3)**	**C-2, Intermediate Commercial**
West	Vacant; Mini-Storage	**Low Density Residential (2-5 du/ac, target 3)**	**C-2, Intermediate Commercial**

PROJECT DESCRIPTION

Request and Development Details

1. The applicant proposes to locate a Medical Marijuana Dispensary within a vacant 1,631 square-foot tenant space. The dispensary will offer pre-packaged medical marijuana and appliances to aid consumption such as water pipes, papers, lighters, and other smoking devices.

2. The site is currently developed as a multi-tenant in-line retail building. There is one tenant—Rosati's Pizza. Other nearby businesses includes Walgreen's, Chase Bank, and Bashas.

3. The property is located north of the northwest corner of Beardsley and Lake Pleasant Road.

DISCUSSION AND ANALYSIS

Applicability

4. Medical Marijuana Dispensaries are permitted subject to the issuance of a Conditional Use Permit in the C-2 (Intermediate Commercial) zoning district. Along with the Conditional Use Permit review criteria, a number of specific use standards apply to the proposed use.

5. Section 14-39-10.D of the Zoning Ordinance outlines the applicable criteria for evaluating Conditional Use Permits. In general, the purpose of a CUP is to mitigate any identified negative impacts on the surrounding neighborhood that may result from a specific use and provide controls to ensure maximum compatibility between nearby land uses.

6. Section 14-9-5 of the Zoning Ordinance outlines the applicable use standards for Medical Marijuana Dispensaries which includes standards for security plans, operating hour limitations, business operation limitations and use separation requirements.

Analysis

7. As a relative new use, there are few best practices established for medical marijuana dispensaries. In an effort to better understand the operation and the use, staff visited a number of dispensaries in California and consulted with planning staff from the City of Palm Springs, CA. Through this fact-finding, standards and guidelines were established which the city believes will effectively and appropriately regulate the operations of the dispensary.

8. The applicant proposes to operate six days a week: 10AM to 9PM weekdays, and 8AM to 5PM on Saturday. The dispensary will be closed Sundays. At least four employees will be on site at any one time to assist patients.

9. Initially, four (4) patients are expected daily. These numbers could increase to 50 as demand dictates. Two patients per employee will be admitted to the medicine room at a time. The capacity of the waiting area will be 10. No outdoor loitering will be permitted. No more than 15 patients/caregivers are expected at any one time.

10. Patients will not have direct access to the medicine room. Once the patient has been verified, a two door "man-trap" will control access to the medicine room.

11. The applicant will install carbon charcoal filters to ensure odor control and compatibility with adjacent uses.

12. Marijuana will be stored in a locked safe during non-business hours and accounted for according to Arizona Department of Health Services (DHS) rules. Items for sale will consist of pre-packed marijuana medicine in accordance with DHS rules. All sales will occur in the medicine room. Non-cardholders will not be granted access to the medicine room or be able to purchase items.

13. Any waste/expired marijuana will be ground and incorporated into other solid wastes, grease and compostable oil wastes rendering it useless. It will be stored indoors until pickup and disposal in accordance with state law and DHS rules.

14. The applicant has produced a security plan accepted by the Peoria Police Department to ensure patient safety and secure operation of the facility. Security is anticipated to be provided by Cutty Protection and Security. Security will be on premise at least 30 minutes prior to opening and through the end of business. Security personnel will be responsible for maintaining safety, ensuring no marijuana consumption occurs in suite or on site or in vehicles on the premises. The personnel will also report criminal activity to the Peoria Police Department and prevent loitering.

15. All doors will be secured with keycard access.

16. Four outdoor cameras and eight indoor cameras will capture high resolution video of the premises 24 hours a day. All video footage will be stored for at least 60 days in accordance with local ordinance.

17. The frontage of the unit will be properly illuminated and the windows will not covered or obscure visibility into the unit. During non-business hours, the

windows and doors will be secured with security gates. The unit will also have an alarm system.

18. The proposed location meets and exceeds the 500-ft use separation from residentially zoned property and the 1000-ft separation requirement from schools day cares, bars, taverns, liquor stores, and substance abuse treatment centers.

19. In staff's judgment, the proposed use is appropriate and in compliance with the zoning code. The use is compatible with surrounding land uses and the context of the area in question. The use is not expected to generate any additional or undue noise, traffic, light trespass, odor or other impacts on adjacent streets and nearby properties.

20. DHS is not accepting application for dispensaries at this time due to a recent Attorney General request for a declaratory ruling regarding the legality of state employees processing medical marijuana applications. Once this is resolved, the state application process will begin. DHS will regulate the operational aspects of the business as it relates to the composition of the dispensary board, background investigations, operational requirements, data logging and transportation requirements among other things.

21. If any issues arise regarding the operation of the business, Section 14-39-12.I provides the Planning Manager with continuing jurisdiction over all Conditional Use Permits. This means that a permit may be revoked, modified or suspended should any of the following occur:

    a. The permit was obtained by fraud or misrepresentation;

    b. The use authorized by the CUP has been exercised in violation of the conditions of approval;

    c. A change in circumstances where the following has occurred: [1] Impacts from the approved CUP to neighboring properties; and [2] Changes in aesthetic or environmental impacts such as noise, odors or pollution.

    d. The use authorized by the CUP is operated in a manner that constitutes a nuisance to neighboring property owners or is exercised in a manner that is detrimental to the public health, welfare or safety.

Noticing and Neighborhood Comment

22. The application notice was forwarded to all property owners within 600 feet of the proposal, including all registered HOA's within one mile, and properly noticed pursuant to Section 14-39-10 of the Peoria Zoning Ordinance.

23. Although no neighbor objections were received, the applicant elected to hold a neighborhood meeting on May 21, 2011. Notice was provided in accordance with Section 14-39-6 of the Zoning Ordinance. Other than the applicant, no one attended the meeting.

24. As of the date of this writing, no letters, emails or phone calls in support or objection of the proposal have been submitted to Planning staff.

Proposition 207

25. The voters of Arizona approved Proposition 207, which among other things requires municipalities to compensate property owners for actions which have the effect of diminishing the value of property. The City Attorney's Office has drafted an agreement which waives the applicant's rights to future Proposition 207 claims against the City. Accordingly, the applicant has agreed to furnish a signed and notarized Proposition 207 Waiver.

FINDINGS AND RECOMMENDATION

26. Based on the following findings:

- The proposal meets the Conditional Use Permit standards and complies with the limitations of use for a Medical Marijuana Dispensary;
- The security plan has been reviewed and accepted by the Peoria Police Department;
- The use will be located and will operate in a manner that protects the adjacent properties and businesses from nuisances and is consistent with a retail/service character of the area.

It is recommended that the Planning and Zoning Commission take the following action:

Approve the applicant's request for a Conditional Use Permit under Case CU11-0010, subject to the following conditions:

1. The use shall substantially conform to the project narrative (Exhibit D), security plan (Exhibit E) and floor plan (Exhibit F) as contained in the staff report to the Planning & Zoning Commission dated June 16, 2011.
2. The applicant shall provide the City a copy of the Department of Health Services dispensary certification within six (6) months of the approval of the Conditional Use Permit. Failure to provide the certification will void the Conditional Use Permit.
3. The applicant shall secure any necessary security (video) system and/or alarm system permits from the Peoria Police Department.

4. The applicant shall obtain a sales tax license and properly report.

Attachments:

Exhibit A	Vicinity / Aerial Map
Exhibit B	Land Use Map
Exhibit C	Zoning Map
Exhibit D	Project Narrative
Exhibit E	Security Plan
Exhibit F	Floor Plan

Prepared by: Ed Boik
Planner

Vicinity/Aerial Map

Exhibit A

CU11-0010 Arizona Grown Healthcare

Applicant: [redacted]

Request: Conditional Use Permit to allow a Medical Marijuana Dispensary

N

Not to Scale

CITY OF PEORIA

Land Use Map

Exhibit B

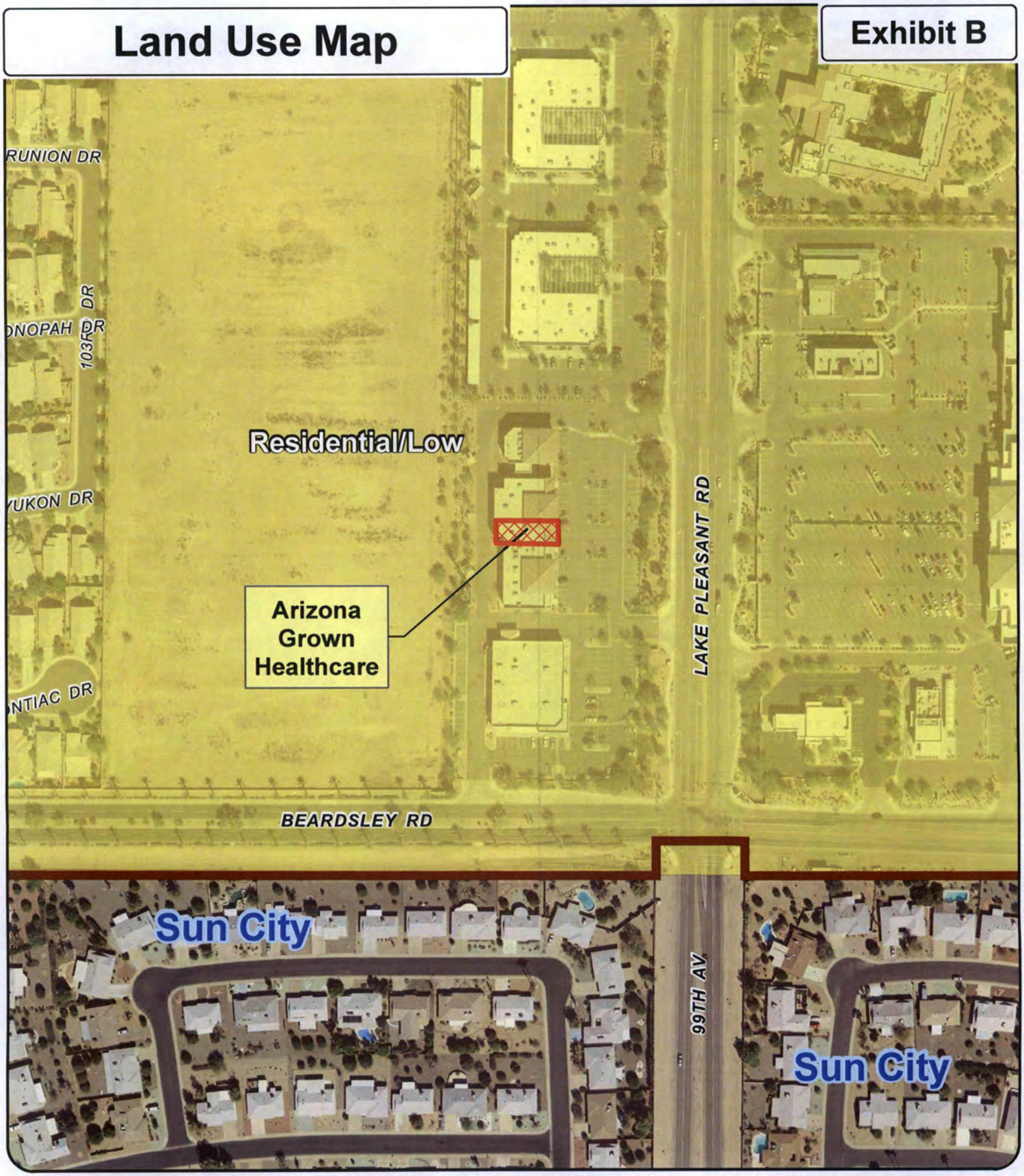

CU11-0010 Arizona Grown Healthcare

Applicant: [redacted]

Request: Conditional Use Permit to allow a Medical Marijuana Dispensary

N

Not to Scale

CITY OF PEORIA

Zoning Map

Exhibit C

CU11-0010 Arizona Grown Healthcare

Applicant: [redacted]

Request: Conditional Use Permit to allow a Medical Marijuana Dispensary

N

Not to Scale

CITY OF PEORIA

EXHIBIT D

Narrative

NARRATIVE

Explaining the relationship of Arizona Healthcare's proposed site to adjacent developments…

Arizona Grown Healthcare proposes a medical marijuana dispensary site at the Pleasant Promenade Retail Center, NWC of Lake Pleasant and Beardsley in Peoria which offers a qualified location meeting all city requirements, safety and security concerns plus other community benefits. Distances, zoning and use of surrounding properties clearly shown by the professionally developed "Distance and Separation Exhibit" attached. Our Security and Floor Plans offer patrons a safe and secure environment discouraging any use onsite or in adjacent areas. Mixes of several social classes are in the surrounding area allowing Arizona Grown Healthcare to benefit a wide variety of Peoria residents and other healthcare providers.

The proposed site also offers several benefits to the community and city:

-The facility will only serve adults and no minors will be allowed in the dispensary.

-Arizona Grown Healthcare will assist in all prosecutions of patrons, employees, volunteers… using the product onsite or in other surrounding areas within a 1 mile radius of the dispensary.

-Arizona Grown Healthcare will operate in a Not-for-Profit model, thus allowing us to donate to programs by neighborhood services and local institutions for improving the local community.

-Arizona Healthcare location offers the City of Peoria and all its boundaries Full coverage of the AZHSD 25 mile radius rules offering MMD card holders to grow medical marijuana at home or other places if located 25 miles from a dispensary. Our location allows City of Peoria Police and the citizens to be assured that no personal cultivation will be permitted in the city limits and to do so would be a crime. This will enable strict tracking and enforcement of the product within the city limits and limit patrons from exploring illegal transactions.

-The proposed location is adjacent to an Urgent Care facility (50 yards), several doctors' offices, retail, financial and other service centers offering citizens convenient access to immediate services and emergency treatment.

-On Site / On Call Medical Director and well trained staff to assist patients with symptoms, educate them on safety, reactions to meds, dispensary policies plus identify and report misuse and abuse of meds.

-Arizona Grown Healthcare will not sell or distribute any seeds or live plants to patrons.

-Arizona Grown Healthcare may sell paraphernalia, bongs, paper, lighters, and any other smoking device that will assist or support the patients use of medicine per the boards recomendation.

TABLE OF CONTENTS

SECTION	PAGE
Company Overview	2
Company Organization	2
Hours Of Operation	3
Opening Procedures	3
Closing Procedures	3
Cash Handling Procedures	4
Patients	4
Waiting Room Capacity	4
Air/Odor Filtration	5-7
Dispensing	7
Storage	8
Disposal	8-9
Security Plan	10-13
Camera Floor Plan	14
Camera Spec Sheets	15-21

COMPANY OVERVIEW

Arizona Grown Healthcare is a full service alternative health and wellness facility that provides medicinal cannabis in a caring, safe and supportive environment. Arizona grown Healthcare provides not only natural and organic treatment for health problems but also free education and a rapid relief therapy program from [redacted]
Our main focus is to act as a source of relief from the physical and emotional pain that our patients are living with day to day.

COMPANY ORGANIZATION

The company will be formed by [redacted] who will incorporate the company as a not-for-profit limited liability corporation. [redacted] will be listed as the chief financial officer, treasurer, and managing director. [redacted] will be the required Medical Director and a board member.

Key Company Management

Key personnel will include [redacted] as Board Directors along with and [redacted] as Board Members and Administrators for daily business.

[redacted] grew up in the Phoenix area, graduating from Greenway High School. After earning a Bachelor of Science degree from Colorado State University, [redacted] returned to the Phoenix area. Since 1997 [redacted] owned and operated his own hearing aid company. His company, Paradise Hearing, has 10 locations located throughout Arizona. Paradise Hearing performs hearing evaluations, hearing aid fittings, and manufactures its own line of hearing aids. With over 5000 active patients, Paradise Hearing is one of the busiest hearing aid companies in Arizona.

[redacted] has extensive experience in financial management and accounting. Bringing this experience to Arizona Grown Healthcare, he will serve as chief financial officer, treasurer, and managing director.

[redacted] a Phoenix resident for the past 40yrs. Graduated from St. Louis U Medical School, MO and performed his residency at Michael Reese Hospital. [redacted] has certification with American Board of Psychiatry & Neurology and American Board of Adolescent Psychiatry. His practice sees over 3000 patients a year in his phoenix office alone.

[redacted] has published a book 'Rapid Relief From Emotional Distress', revised 2010 by Author House. His education and experience in pain management from a psychological approach will enable us to provide the mental well-being needed to deal with the chronic pain associated with most medicinal marijuana patients. Having prescribed medications for the past 30 yrs gives [redacted] a opportunity to educate and provide support materials and therapy for all patients.

HOURS OF OPERATION

Monday – Friday	10:00AM-9:00PM
Saturday	8:00AM-5:00PM
Sunday	CLOSED
Holidays	TBD-Board Members

Article 14-9-5-2(g). The Dispensary shall have operating hours not earlier than 8:00 a.m. and not later than 9:00 p.m.

OPENING PROCEDURES

Several employees should be present during opening and closing procedures. Before opening, the area should be scanned for any potential threats. The premises should also be examined before and upon entry for any signs of burglary.

The manager, security guard and opening employees will arrive at the location to open it at 9:30am. Upon first entering in the morning, the day manager will unlock the gate and turn off the alarm. Before doing this the manager and security guard will check the parking lot and surrounding area for any potential threats. While the manager unlocks the gate, the security guard will keep an eye out for any potential problems. Once the gate is open, the manager will then enter and turn off the burglar alarm while the security guard waits out front.

Once the manager disarms the alarm system, he/she will then notify the security guard and any employees that it is OK to enter the building. Any patients that have arrived early must wait in their car or away from the premises so that they do not loiter while the company's opening procedures are completed.

The manager will then proceed to the back office along with the security guard, checking for anything unusual. Once the manager reaches the back office, he/she will then unlock the safe and turn on the monitor and computer in the back office.

CLOSING PROCEDURES

At the end of the night all medicine will be weighed out and the ending weight written down. All medicine will be totaled according to their written weight on their packaging and any other inventory will be tallied and recorded in Microsoft Excel.

Each employee will count out the ending balance from their drawer and hand in their receipt book. The closing manager will tally all receipt books and match the totals to the amount in the register.

Before leaving the facility, employees should thoroughly inspect the building to make sure that no one is hiding inside the business. Before entering the parking lot, the security guard and employees should check the parking lot and scan to make sure that no potential threats exist.

CASH HANDLING PROCEDURES

Cash will be deposited in the bank daily. The armed security guard will assist manager in walking north(50yds) to Chase bank.
Any discrepancies in the count should be immediately brought to the attention of the President and Treasurer of the company by a phone call and/or email. A second count should be made and the funds should be given to the armed guard.
If cash or inventory is delivered or deposited by a manager, all attempts should be made to be as low key and inconspicuous as possible. Times should be varied and no disclosure to unnecessary personnel, including security guards, should be made.
The safe should be locked when not in use, especially during the day while the business is operating. No excess or surplus cash or inventory should be kept on hand when possible. Cash and inventory should always be counted in a back office and should never be counted or weighed in front of customers.

PATIENTS

Max Expected
(At One Time) – 15 Patients

We will have 2 dispensary agents ready to service patients behind the counter and will allow 2 patients to be waiting their turn. There could be a caregiver , bringing the total to 5 patients in medicine dispensing room. We can comfortably hold 10 more in lobby if needed to help prevent and deter any loitering outside.

Max Expected
(Daily) – 50 Patients

Projections show as little as 4 patients a day early on.

CAPACITY WAITING AREA – 10 Patients

This public entrance and waiting area for patients is 218 sq/ft and will adequately accommodate 10 people.

The product offered for retail sales to Medical Marijuana Cardholders shall be inaccessible to the public entering the Medical Marijuana Dispensary. All product provided for retail sales shall be located behind a counter staffed by a Nonprofit Medical Marijuana Dispensary Agent as defined by A.R.S.§ 36-2801.et.seq.

AIR/ODOR FILTRATION

There shall be no emission of dust, fumes, vapors or odors into the environment from the premise as per Article14-9-5-1(c).

We will use Carbon/Charcoal Air Filters due to their superior quality and ability to move higher cfm's than alternatives. These carbon/charcoal filters will actually be in-line with our air circulation unit, preventing any air from leaving the suite that has not properly been de-odorized. See picture below.

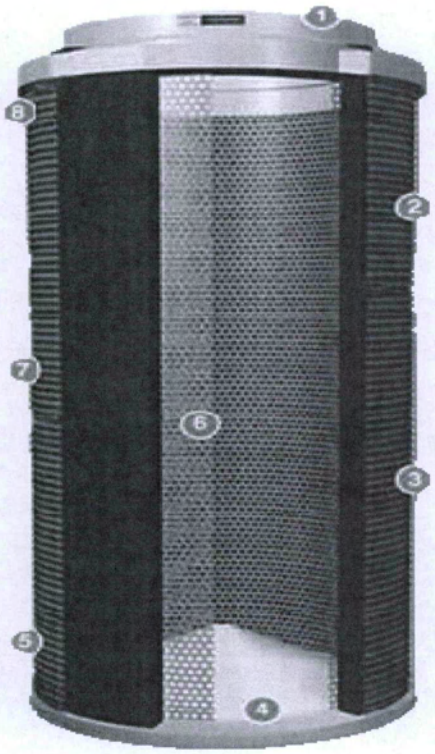

1. Aluminum tops & bases for reduced weight.
   Half the weight of competitive filters.

2. 46mm (1.8") RC-48 activated, certified virgin carbon bed.

3. Machine packed carbon means more carbon & less movement.

4. Cone shaped internal base for optimum air flow.

5. Sealed, bagged, boxed & labeled directly after being manufactured for optimum life span, handling & presentation.

6. 51% open air custom mesh.

7. Unique "Anti Air Bypass" System.

RC-48 Activated Carbon/Charcoal

To ensure total air filtration, there are several important factors to consider. The first and most important factor is carbon grade choice. Grade RC-48 carbon is derived from an ancient black coal deposit found only in Western Australia. The particular deposit is dated at over 250 million years old. After being extracted, the RC-48 carbon is kiln activated at 1200°C in a saturated steam atmosphere. It is this process together with the coals unique density that causes the pores in the carbon to form. This activation process makes the RC-48 carbon incredibly effective for the filtration of organic particles and other airborne materials. Because we use the purest available "activated virgin" carbon and our granulated carbon has more surface area than pelletized carbon.

Filter RC 48 Australian(on top)

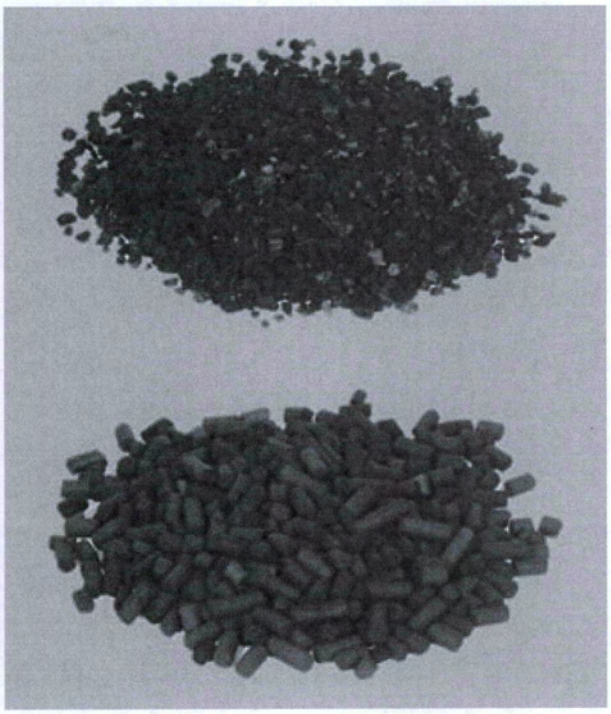

Standard Laboratory Equipment

Carbon Filters are used by labs, plant breeding, germplasms, tissue culture and commercial greenhouses for their total airstream filtration requirements. This professional-grade equipment is the best filter available on the market.

Testing

CTC or "airstream removal tests" (ASTM D 3467-94) prove that our carbon can absorb 108.3% of its own weight. This is how our small, but powerful filters produce higher CFM and filtration at half the size & weight of competing filters.

Maintenance

To get the optimum product life from the filter, it should be used with the provided pre-filter sock. This pre-filter sock catches the large dust particulates and foreign materials which if allowed to come in contact with the carbon will ultimately clog the outer surface of the carbon before total internal saturation has been achieved. When this happens it unnecessarily shortens the product life of the filter. It is recommended that the pre-filter be machine-washed or replaced every six months. Extremely dusty environments, like Arizona, may require a more regular cleaning program. There is no given limit to the life expectancy of RC-48 carbon filter. The total life span can only be governed by the amount of impurities absorbed by the carbon over time. The rate of air movement through the carbon bed, total air impurities and climatic conditions are the factors that determine the speed at which the porous carbon granules reach maximum capacity. There is a global industry standard where carbon is tested for "ID factor" and are given an "iodine number" to American ATSM standards. ID factor can simply be explained as the measurement of the amount of iodine in milligrams that can be absorbed by a single gram of activated carbon. The higher the ID factor, the higher the absorption rate. The average coal based carbon is around 500 mg/g ID. On the other hand, RC-48 carbon has a guaranteed analysis of 1050 mg/g ID. All this said, as a guide rather than a rule, we will replace our filters around two years. The plastic membrane will need to be replaced every 6 months.

Location of Units

1.) A 8 x 24 sized filter will be in-line with existing duct work to ensure all returned air that passes thru hvac unit will be odorless.
2.) A 6 x 24 sized filter will be free-standing near counter area where medicine is dispensed. By placing a fan on top of filter it will circulate all odor thru the filter eliminating the odor on contact.
3.) If needed, a third commercial grade True Hepa filter will be in waiting area as you enter facility.

DISPENSING MEDICAL MARIJUANA

Before a dispensary agent dispenses medical marijuana to a qualified patient or a designated caregiver, the dispensary agent shall:

1.) Verify the qualifying patient or designated caregiver's identity
2.) Offer any appropriate patient education or support materials
3.) Verify Identification number and validity from card into the medical marijuana electronic verification system
4.) Verify the patients limit for last 14 days to ensure they have not exceeded state law
5.) Enter all necessary info in verification system including: amount, type, date, agent's #, patients #

STORAGE

NO Marijuana will be stored outside facility at anytime.

During business hours all medical marijuana will be held in jars behind locked glass cabinets only assessable by dispensary agents.

Not operating hours all medical marijuana will be stored in the commercial grade safe's in a secure storage room.

Medical marijuana will never be stored anywhere other than the safe or behind serving counter, unless otherwise told by local or state authority otherwise.

DISPOSAL OF MEDICAL MARIJUANA WASTE

Medical Marijuana remnants or by-products shall be disposed of according to an approved plan and not placed within the facility's exterior refuse containers. We are anticipating no daily by-products of any medicine that will need disposal. And since no cultivation is taking place we are not expecting to have any daily disposal.

Potential Reasons to Dispose:
Expired medicine
Contaminated medicine
Tampered medicine
Damaged medicine

A. Medical marijuana waste will be stored, secured and managed in Accordance with applicable state statutes and regulations.

B. Medical marijuana waste will be stored secured and managed in Accordance with local and state regulations, ordinances and other Requirements.

C. Liquid waste from medical marijuana facilities shall be disposed of in Compliance with the applicable Waste Water Quality Control Division statutes and regulations.

D. Medical marijuana waste must be made unusable prior to leaving a registered Facility's secured storage and management area.

E. Medical marijuana waste shall be rendered unusable through the following Methods:

1. By grinding and incorporating the medical marijuana waste with non-consumable, solid wastes listed below such that the resulting mixture Is at least fifty percent non marijuana waste:

a. Paper waste
b. Plastic waste
c. Cardboard waste
d. Food waste
h. Soil

2. By incorporating the medical marijuana waste with non-consumable, Recyclable solid wastes listed below:

a. Grease or other compostable oil waste,
b. Bokashi, or other compost activators.

F. After the medical marijuana waste is made unusable, then the solid waste Shall be:

1. Disposed of as a solid waste at solid waste site and disposal facility that has a Certificate of Designation from the local governing body and that is approved by the AZHD.
2. Deposited at a compost facility that has a Certificate of Designation from the Department of Public Health and Environment
3. Composted on-site at a facility owned by the generator and operated in compliance with the Regulations Pertaining to Solid Waste Sites and Public Health and Environment.
4. Removed and disposed by a Waste Management Company that is in state and local compliance for such activity.

G. How to Dispose:

1) Contain medicine
2) Make medicine unusable per section E-1,2
3) Properly remove all medicine and place in Red Haz-Mat Bags
4) Place in locked waste receptacle in locked storage(see location on floor plan)
5) Record Weight, Type, Batch, Crop,& Name. Any other pertinent information should be written in Disposal Log-Book and on red bag, must have administrator or supervisor sign log-book to confirm.
6) Properly record in management books and POS system
7) Call Local Law Enforcement or Waste Removal Company, to be determined by administrator with board approval
8) Notify cultivation site of any medicine that needed to be disposed

EXHIBIT E

Security Management Plan

SECURITY MANAGEMENT PLAN

Armed Guard/Security Company-Cutty Protection and Security

- Security company doing business in Arizona for over a decade
- Upper management in the industry over 30 years
- Experienced, cross licensed & cross trained personnel
- Strong management team
- Strong relationships with law enforcement
- Provide investigations through separate division, Cutty and Associates
- Cutty Protection and Security hires ONLY level 3 personnel who must have at least 3-5 years of onsite experience and extensive training
- All licensed ARMED GUARDS have completed not only the required armed training but are also required to obtain a concealed carry weapon license
- We will have a professional and consistent level of service which provides us a higher level of security.

Security Monitoring Company-ADT

- Standard in the Industry-24/7 Monitoring
- All Doors and Windows will be monitored, along with motion sensors in front and back entrances
- ADT® Safewatch VideoView® security surveillance. With Safewatch VideoView surveillance, we can get a system with up to 12 indoor or outdoor color cameras that can be viewed from any web-enabled computer, cell phone, or PDA. We can configure our system to allow us to view video from any room in the dispensary on any connected TV or dedicated monitor.

Security Philosophy

- This is not a business to fear, nor will it attract crime AS LONG AS CLEAR SECURITY STRATEGIES ARE IMPLEMENTED AND ENFORCED.
- We will partner with our security company to educate the community, consistently evaluate any and all plans in place and modify accordingly.
- First and foremost is the safety and well-being of patients, caregivers and employees. With this as the utmost priority, this dispensary will be one of the safest businesses to patronize in the State.
- **All of Cutty's security guards will receive specialized training for this industry and will be cross licensed and cross trained as investigators.**
- Neighborhood Services/Community Outreach will be an important part of our Security Plan for our neighborhood. We will make ourselves available to our neighborhoods to attend open forums or town meetings to address any and all security questions.
- City approval is paramount for success and we will work with our neighbors to develop a comprehensive program that city will embrace.

Key Card Entrances

- All entrances will require a key card access. We will use the newest access control systems which are IP based and will be called hosted access controlled.
- Patients will enter the lobby/intake area through one door, verify identification and be buzzed through to dispensary area and accompanied by security guard, if possible.
- Security guard will have key access to all areas while employees will have limited access to only those areas in which they work. Owners and medical director will have unlimited access.
- Patients leaving dispensary area will be escorted thru lobby and to their vehicle if requested.

Transportation

- Transportation will be executed according to the rules outlined in Prop 203. This will include additional security safeguards including:
- A schedule will be developed that will be day specific for certain geographical areas. Transport from grow facility to dispensary will be in an unmarked vehicle which will be equipped with a GPS tracking device. A surveillance camera will be mounted in the back of the vehicle and will be monitored by the security guard via Smartphone or computer.

Before transportation, a dispensary agent shall:
Complete a trip plan that includes:
1. The name of the dispensary agent in charge of transporting the marijuana;
2. The date and start time of the trip;
3. A description of the marijuana, marijuana plants, or marijuana paraphernalia being transported; and
4. The anticipated route of transportation; and
5. Provide a copy of the trip plan in subsection to the dispensary.

During transportation, a dispensary agent shall:
1. Carry a copy of the trip plan in subsection with the dispensary agent for the duration of the trip;
2. Use a vehicle without any medical marijuana identification;
3. Have a means of communication with the dispensary; and
4. Ensure that the marijuana, marijuana plants, or marijuana paraphernalia are not visible.
5. After transportation, a dispensary agent shall enter the end time of the trip and any changes to the trip plan on the trip plan required in subsection.

CCTV Video Surveillance System

- The video surveillance system for this dispensary has been professionally designed to meet or exceed all current requirements of the Arizona Department of Health Services for Electronic Monitoring by Video Cameras.

- All cameras specified in this video surveillance system are an extremely high 600 TVL resolution, and capable of Day/Night viewing utilizing a combination of Infra-Red Light (IR Cameras) and extremely low lux ratings (.0002 lux). This assures that all images captured will be of the highest quality for identification of persons and activity on and adjacent to the medical marijuana dispensary. All live video cameras will be viewable on a 19" LCD monitor located in a non-public area of the facility. In addition, selected live video of public areas will be viewable at the on-duty guard station via a separate monitor.

- Recording of all video images is accomplished by a PC-based Digital Video Recording System, and will be done in a resolution of 704 x 480 at 30 fps. Video files will be archived for a period of no less than **60 days** on the built-in hard disk drive and will be easily exported via DVD or USB. In addition, the system is able to immediately produce a printed image of any captured video frame, and includes an audio and video warning notice if any individual video channel is lost or interrupted.

- All live video streams and recorded video will be available to management and authorized viewers through a remote http: Internet connection.

- The video surveillance system will be integrated with the Point of Sale system to capture all transaction information as a text overlay on cameras designated for Point of Sale observation (cameras 4 and 5). The system will also allow a local or remote search based on pre-defined text strings such as "VOID", "NEW TRANSACTION", or transaction number.

- The uptime of the video surveillance system and all related components will be assured by utilization of an Interactive UPS System, from which all critical components shall be powered. This battery backup system will protect all electronics from under- and over-voltages, and is capable of maintaining constant power to the video surveillance system in the event of a total loss of power for a period at least 60 minutes.

- All critical recording and power supply equipment will be contained in a key-secured enclosure located in the Dispensary Manager's office.

<u>The video surveillance system consists of twelve cameras</u>:

1. <u>Exterior front adjacent parking area</u>. This camera shall be enclosed in a weatherproof and tamper-resistant housing and be capable of viewing in extreme

low-light conditions to assure capturing all activity in the parking area in front of the facility.

2. Exterior storefront and entrance. This camera shall be a horizontally wall-mounted and tamper-resistant dome and be capable of viewing in extreme low-light conditions to assure capturing all activity directly outside of the front of the facility, including all persons entering/exiting the facility through the front door.
3. Counter-top Color Pole Camera at Patient Check-In Counter. This camera is mounted at eye level and faces directly in front of the patient check-in window to capture clear and close images of all patient faces.
4. Wide Angle Interior Dispensary Dome Camera. This camera will capture all activity in the public entry area of the dispensary. By utilizing IR lighting, this camera is capable of viewing even in zero light conditions. This camera is equipped with a special "Wide Dynamic Range" chip to minimize issues with backlight from outside the window/door, which might otherwise diminish the view of the subject.
5. Narrow Angle Dome Camera over Point of Sale Location #1. This camera will allow a clear view of any qualifying patient or designated caregiver purchasing medical marijuana, as well as the activity of the dispensary clerk.
6. Narrow Angle Dome Camera over Point of Sale Location #2. This camera will allow a clear view of any qualifying patient or designated caregiver purchasing medical marijuana, as well as the activity of the dispensary clerk..
7. Wide Angle Interior Dispensary Dome Camera. This camera will capture all activity in the patient sales area of the dispensary. By utilizing IR lighting, this camera is capable of viewing even in zero light conditions.
8. Wide Angle Interior Receiving Area Dome Camera. This camera will capture all activity in the receiving area of the dispensary, including all persons entering/exiting through the rear door of the facility. By utilizing IR lighting, this camera is capable of viewing even in zero light conditions.
9. Wide Angle Interior Receiving Area Dome Camera. This camera will capture all activity in the receiving area of the dispensary, including all persons entering the receiving area through the dispensary office or secure hallway door. By utilizing IR lighting, this camera is capable of viewing even in zero light conditions.
10. Exterior Rear of Building and Rear Door. This camera will capture images of all persons entering/exiting through the rear door of the facility. This camera shall be enclosed in a weatherproof and tamper-resistant housing and be capable of viewing in extreme low-light conditions to assure capturing all activity behind the facility.
11. Exterior Rear of Building and adjacent area. This camera will provide a clear view of the area outside of the rear door which is behind a corner and not viewable from Camera #10. This camera shall be enclosed in a weatherproof and tamper-resistant housing and be capable of viewing in extreme low-light conditions to assure capturing all activity behind the facility.
12. Wide Angle Interior Office Dome Camera. This camera will capture all activity in the dispensary office, including capturing all persons entering the room. By utilizing IR lighting, this camera is capable of viewing even in zero light conditions.

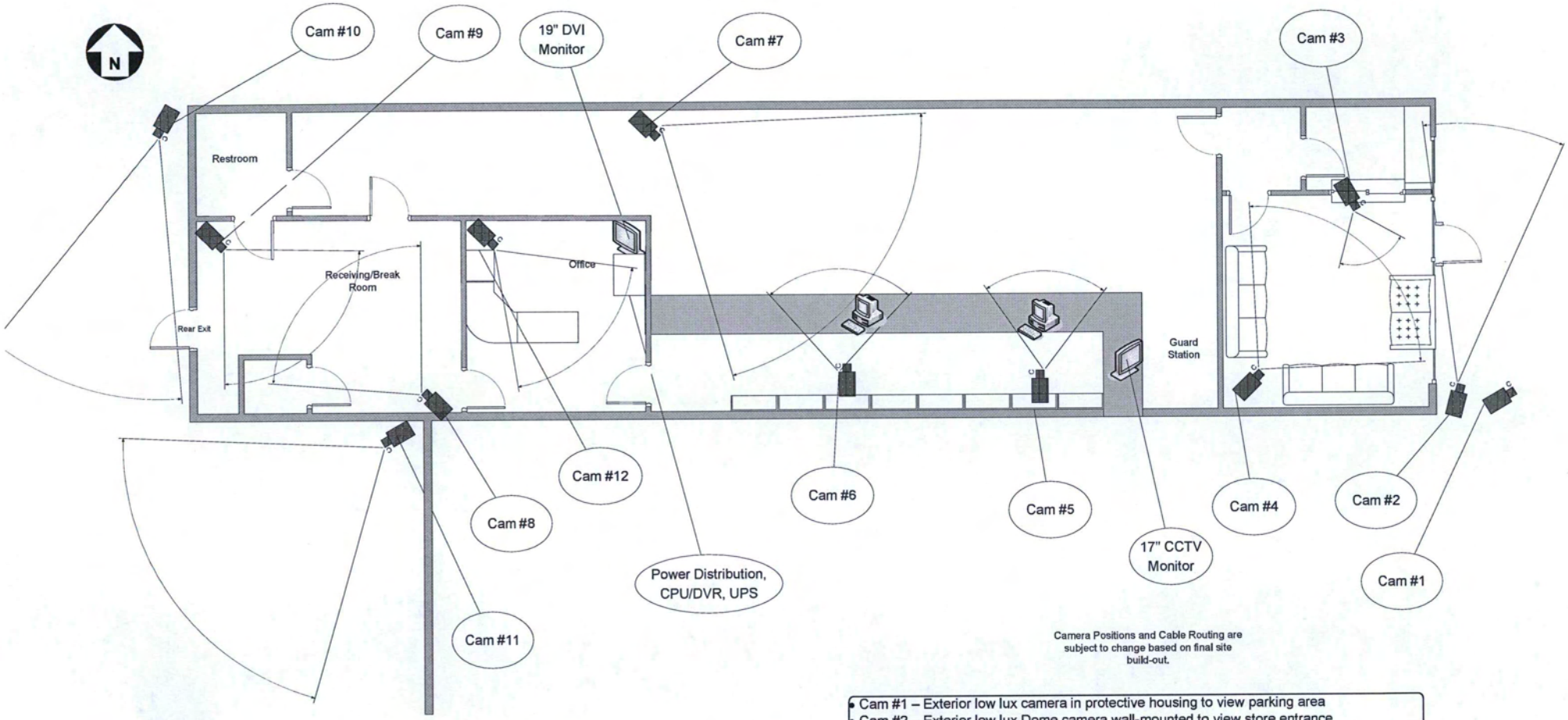

Camera Positions and Cable Routing are subject to change based on final site build-out.

- Cam #1 – Exterior low lux camera in protective housing to view parking area
- Cam #2 – Exterior low lux Dome camera wall-mounted to view store entrance
- Cam #3 – Counter-top Color Camera
- Cam #4 – Wide-angle IR WDR (Wide Dynamic Range) dome camera
- Cam #5 - Varifocal Hi-Res Low Lux dome camera to observe sales counter/cash drawer
- Cam #6 – Varifocal Hi-Res Low Lux dome camera to observe sales counter/cash drawer
- Cam #7 – Wide-angle IR dome camera
- Cam #8 – Wide-angle IR dome camera
- Cam #9 - Wide-angle IR dome camera
- Cam #10 - Exterior low lux camera in protective housing, wall-mounted
- Cam #11 - Exterior low lux camera in protective housing, wall-mounted
- Cam #12 - Wide-angle IR dome camera

Arizona Grown Healthcare
CCTV Video Security Layout

Prepared by: Tri-Tek Video & Security 602-371-0860	*CONFIDENTIAL – NOT FOR DISTRIBUTION*

VCNV-327 NEW

Familly Looking Vandal Dome Series

- 600TV Lines
- WDR
- 3D-DNR
- D&N Support

SPECIFICATIONS

MODEL	VCNV-327	VCPV-327
Image Sensor	1/3" Interline Dual Scan CCD	
Total Pixels	811 (H) x 508 (V), 410K	795 (H) x 596 (V), 470K
Scanning System	2 : 1 Interlace	
Scanning Frequency	15.734KHz , 59.94Hz	15.625KHz , 50Hz
Resolution	600TV Lines (700TV Lines B/W)	
Shutter Speed	1/60~1/90,000	1/50~1/90,000
Sens Up	ON/OFF (2x~128x)	
S/N Ratio	More than 52dB (AGC OFF)	
Sync.System	Internal / External (Line Lock)	
White Balance	ATW / AWC / Manual (1,700K~11,000K)	
OSD	Built-in	
D- Zoom	8X (Built-in Pan/Tilt)	
DNR	ON/ OFF (3D-DNR)	
WDR	ON / OFF (60dB)	
Backlight Compensation	Off / WDR / BLC / HSBLC	
D&N	Color / BW / Auto (ICR Filter change)	
P.Masking	8 Zone	
Min.Illumination	0.0002 Lux	
Lens	f=2.8~11mm Vari-focal (Fixed 3.6mm)	
Video Output	1Vp-p Composite (75 ohm)	
Power Supply	DC12V / AC 24V	
Power Consumption	4.4W	
Operating Temp.	-10°C ~ 50°C	
Operating Humidity	0%RH ~80%RH	

FEATURES

- **1/3" Inteline Dual Scan CCD**
- Seamless AE Intelligent Control Solution
- **High resolution of 600TV Lines of Color Resolution**
- **Advanced WDR Support**
- Built-in 3-D Digital Noise Reduction (3D-DNR) Filter
- ICR D&N function provides high quality images in both day and night
- HSBLC will darken / brighten image portions for clearer images
- Broader color temperature range AWB(1700˚K ~ 11000˚K)
- User friendly setting MD, Private Zone Masking
- Balun External Video Out Put
- 3-Aixs Gimbal
- IP67 aluminum diecasting, water proof structure
- Safety strap holds dome cover in place while making adjustments
- Wall or ceiling mount available

MODEL SELECTION

** VCNV-327A : Same spec With Dual Voltage, Heater and 24pcs

DIMENSIONS

Unit : mm

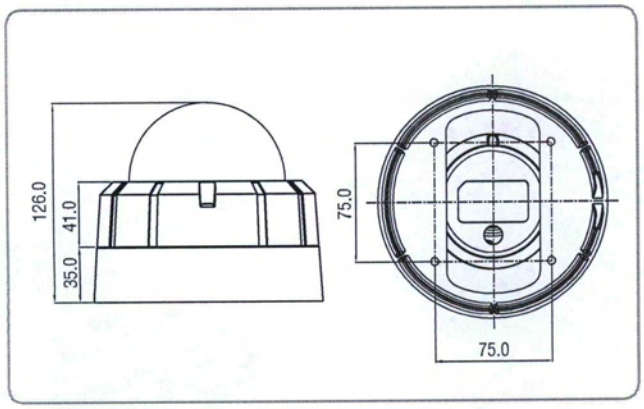

CONNECTIONS

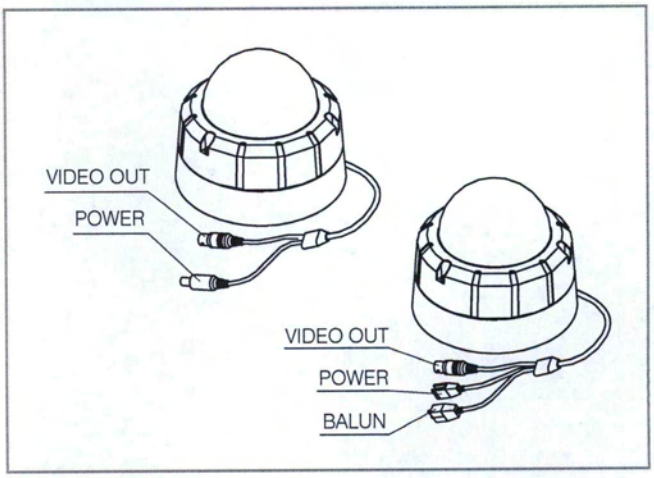

BCN-1030

Advanced WDR Camera

- 600TV Lines
- WDR
- 3D-DNR
- HSBLC
- D&N Support

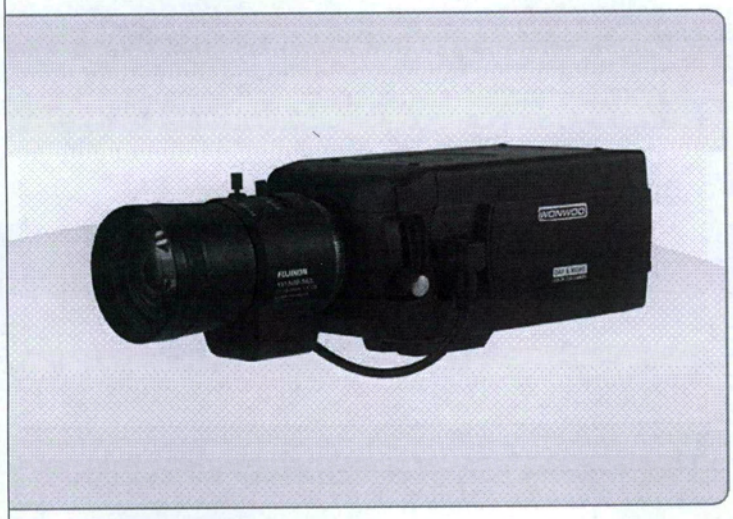

SPECIFICATIONS

MODEL		BCN-1030	BCP-1030
Scanning Frequency		15.734KHz (H), 59.94 Hz (V)	15.625KHz (H), 50 Hz (V)
Horizontal Resolution		600 TV Lines (700TV Lines B/W)	
Total Pixels / Effective Pixels		410K /380K	470K /440K
Image Device		1/3" Sony Interline Dual Scan CCD	
Lens		C/CS Mount (C mount Adaptor Ring)	
Signal Process		XDI DSP	
IRIS Control		DC / ELC / VIDEO Selectable	
Sync System		Interal / External (Line Lock)	
S/N Ratio		More Than 52dB (AGC Off)	
Minimum Illumination		0.00003 Lux (Sense-up)	
Video Output Signal		1Vp-p Composite (75ohm)	
Digital Zoom		8X	
Funtion	WDR	On / Off (60dB)	
	HSBLC	On / Off	
	3D-DNR	On / Off	
	Sense-up	On / Off (2x ~ 512x)	
	D&N	True Day &Night (ICR filter change) : Auto, Day, Night, Ext D&N	
	Gain Control	Off / Low / Middle / High	
	Shutter Speed	1/60 - 1/90,000	1/50 - 1/90,000
	E. Sensitivity	Auto (1x ~ 128x)	
	White Balance	ATW / AWC / Manual (1,700°K ~ 11,000°K)	
	M. Detection	4 Area	
	P. Masking	8 Zone	
	OSD Display	YES	
	E.image stabilizer	On/ Off	
	Sharpness	Adjustable	
Power Source		DC 12V / AC 24V	
Power Consumption		4.4W	
Operating Temp		-10°C ~ 50°C / 9%RH ~ 80%RH	
Dimension		70.57(W) x 61.7(H) x 133.3(D) mm	
Weight		440g	

FEATURES

- **1/3" Interline Dual Scan CCD**
- **Max 512x Sens Up, Low illuminance 0.00003 Lux**
- Seamless AE Intelligent Control Solution
- High resolution of 600TV Lines of Color Resolution
- Built-in 3-D Digital Noise Reduction (3D-DNR) Filter
- ICR D&N function provides high quality images in both day and night
- HSBLC will darken / brighten image portions for clearer images
- Broader color temperature range AWB(1700˚K ~ 11000˚K)
- User friendly setting Motion detection, Private Zone Masking
- Balun External Video Out Put

DIMENSIONS

Unit : mm

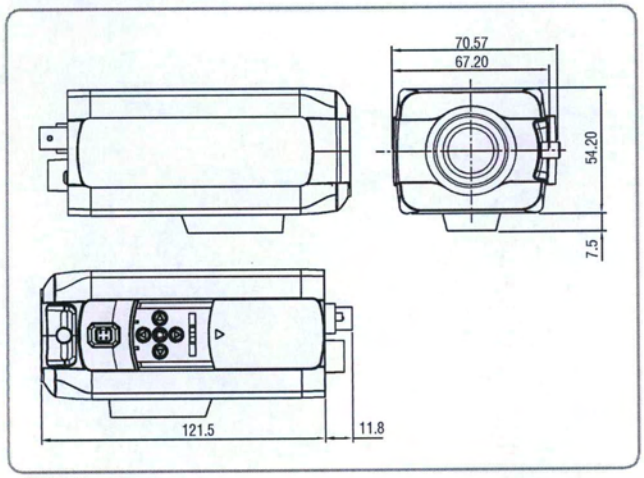

REAR PANEL

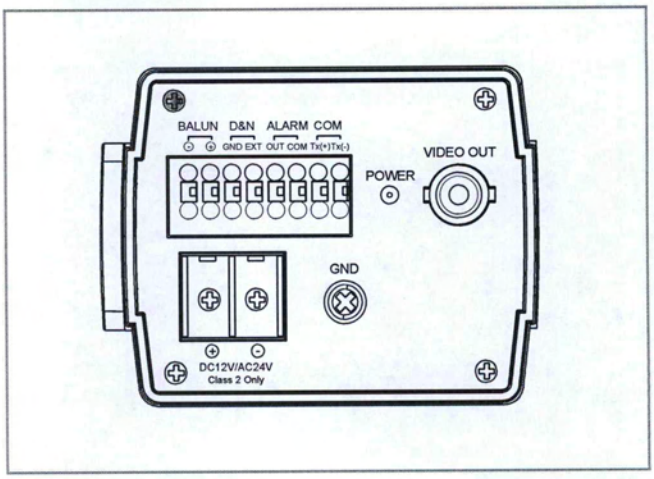

DCNV-326R

Familly Looking Plastic Dome Series

- 600TV Lines
- 3D-DNR
- D&N Support
- Built-in IR LED 24pcs

SPECIFICATIONS

MODEL	DCNV-326R	DCPV-326R
Image Sensor	1/3" Super HAD CCD	
Total Pixels	811 (H) x 508 (V), 410K	795 (H) x 596 (V), 470K
Scanning System	2 : 1 Interlace	
Scanning Frequency	15.734KHz , 59.94Hz	15.625KHz , 50Hz
Resolution	600TV Lines (700TV Lines B/W)	
Shutter Speed	1/60~1/90,000	1/50~1/90,000
Sens Up	ON/OFF (2x~128x)	
S/N Ratio	More than 52dB (AGC OFF)	
Sync.System	Internal / External (Line Lock)	
White Balance	ATW / AWC / Manual (1,700K~11,000K)	
OSD	Built-in	
D- Zoom	8X (Built-in Pan/Tilt)	
DNR	ON/ OFF (3D-DNR)	
Backlight Compensation	Off / WDR / BLC / HSBLC	
D&N	Color / BW / Auto (ICR Filter change)	
P.Masking	8 Zone	
Min.Illumination	0.0002 Lux / 0 Lux (IR ON)	
Lens	f=2.8~11mm Vari-focal (Fixed 3.6mm)	
Video Output	1Vp-p Composite (75 ohm)	
Power Supply	DC12V / AC 24V	
Power Consumption	4.4W	
Operating Temp.	-10°C ~ 50°C	
Operating Humidity	0%RH ~80%RH	

FEATURES

- **1/3" Super HAD CCD**
- Seamless AE Intelligent Control Solution
- **High resolution of 600TV Lines of Color Resolution**
- Built-in 3-D Digital Noise Reduction (3D-DNR) Filter
- Mechanical IR cut filter removable (TDN)-Built-in 24pcs IR
- ICR D&N function provides high quality images in both day and night
- HSBLC will darken / brighten image portions for clearer images
- Broader color temperature range AWB(1700˚K ~ 11000˚K)
- User friendly setting MD, Private Zone Masking
- Balun External Video Out Put
- 3-Aixs Gimbal
- Safety strap holds dome cover in place while making adjustments
- Plastic dome housing for indoor application

DIMENSIONS

Unit : mm

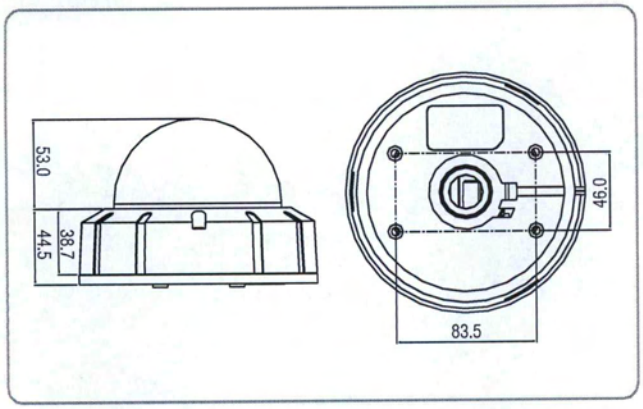

CONNECTIONS

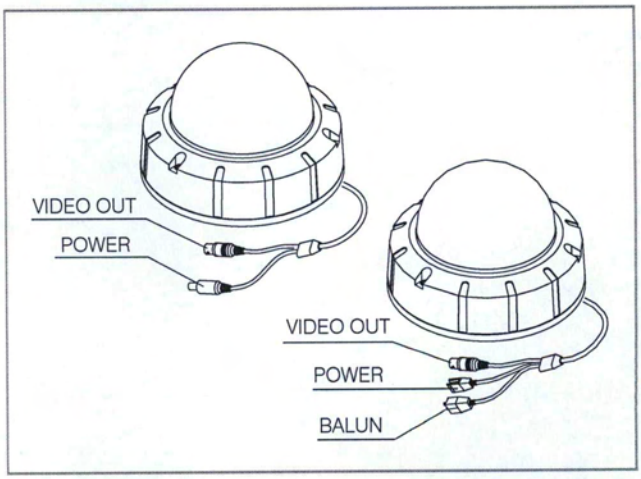

DCNV-327R

600TV Line WDR Plastic Dome Camera

- 600TV Lines
- WDR
- 3D-DNR
- D&N Support
- Built-in IR LED 24pcs

FEATURES

- **1/3" Inteline Dual Scan CCD**
- Seamless AE Intelligent Control Solution
- **High resolution of** 600TV Lines of Color Resolution
- **Advanced WDR Support**
- Built-in 3-D Digital Noise Reduction (3D-DNR) Filter
- Mechanical IR cut filter removable (TDN)-Built-in 24pcs IR
- ICR D&N function provides high quality images in both day and night
- HSBLC will darken / brighten image portions for clearer images
- Broader color temperature range AWB(1700˚K ~ 11000˚K)
- User friendly setting MD, Private Zone Masking
- Balun External Video Out Put
- 3-Aixs Gimbal
- Safety strap holds dome cover in place while making adjustments
- Plastic dome housing for indoor application

SPECIFICATIONS

MODEL	DCNV-327R	DCPV-327R
Image Sensor	1/3" Interline Dual Scan CCD	
Total Pixels	811 (H) x 508 (V), 410K	795 (H) x 596 (V), 470K
Scanning System	2 : 1 Interlace	
Scanning Frequency	15.734KHz , 59.94Hz	15.625KHz , 50Hz
Resolution	600TV Lines (700TV Lines B/W)	
Shutter Speed	1/60~1/90,000	1/50~1/90,000
Sens Up	ON/OFF (2x~128x)	
S/N Ratio	More than 52dB (AGC OFF)	
Sync.System	Internal / External (Line Lock)	
White Balance	ATW / AWC / Manual (1,700°K~11,000°K)	
OSD	Built-in	
D- Zoom	8X (Built-in Pan/Tilt)	
DNR	ON/ OFF (3D-DNR)	
WDR	ON / OFF (60dB)	
Backlight Compensation	Off / WDR / BLC / HSBLC	
D&N	Color / BW / Auto (ICR Filter change)	
P.Masking	8 Zone	
Min.Illumination	0.0002 Lux / 0 Lux (IR ON)	
Lens	f=2.8~11mm Vari-focal (Fixed 3.6mm)	
Video Output	1Vp-p Composite (75 ohm)	
Power Supply	DC12V / AC 24V	
Power Consumption	4.4W	
Operating Temp.	-10°C ~ 50°C	
Operating Humidity	0%RH ~80%RH	

DIMENSIONS

Unit : mm

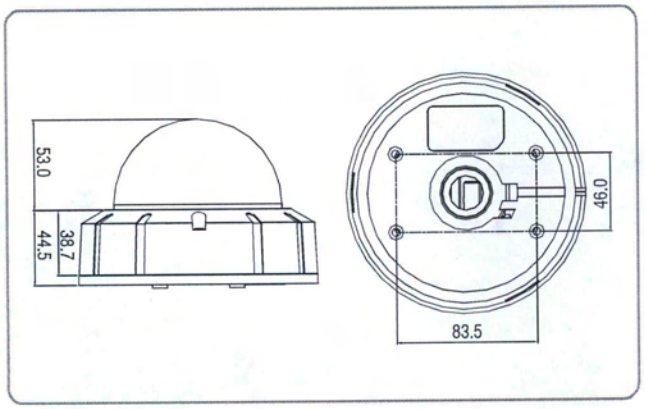

CONNECTIONS

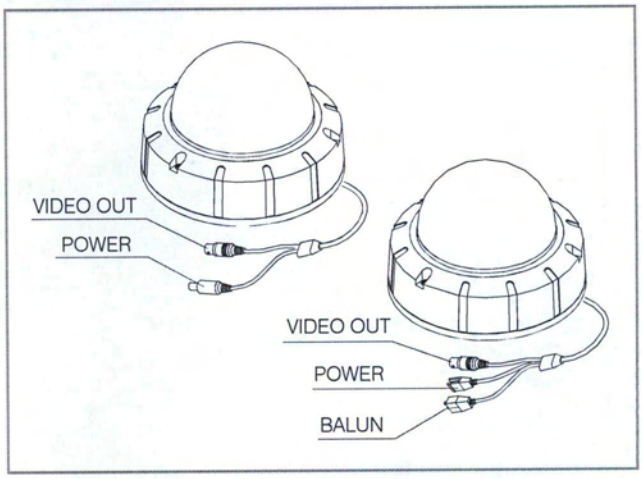

COLOR COUNTER CAMERA

speco technologies®

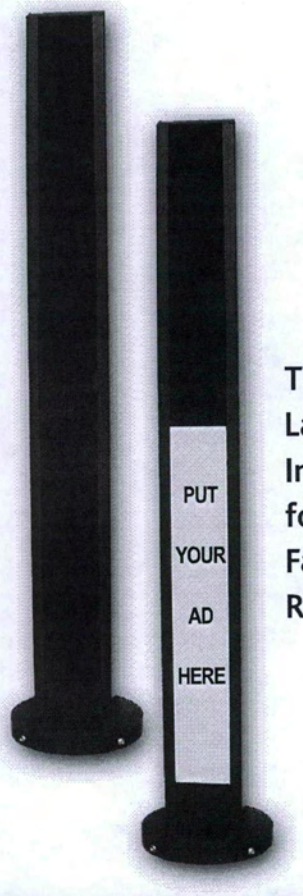

Color Counter Camera with 2.9mm Lens & 24V AC Line-Locked Operation

The Latest Innovation for Facial Recognition

TC23

Features:

This counter camera allows you to view a person's face by placing an unobtrusive camera at eye level. Pictures of the top of your customer's head or hat are a thing of the past. Our color camera operates on 24V AC power which allows for line lock and "drift free" color pictures. The base allows for easy horizontal angle adjustment and the camera location inside the housing can be tilted. A cable is located through the base for a more concealed and secure installation. Also features room for an advertising panel.

Specifications

- Tower height 24" - call for custom sizes
- 2.9mm fixed focal lens
- 480 lines of resolution
- 1/3" color Sony Super-HAD™ CCD sensor
- 1 lux low light sensitivity
- Back Light Compensation (BLC)
- Optional lenses available
- Metal and lexan housing
- Power consumption: 200mA
- Power supply: 24V AC @ 20VA required
- Standard dimensions: 24" H 2.75" D

Specifications subject to change

For more information contact us at:
Speco Technologies 200 New Highway, Amityville, NY 11701 **Web:** www.specotech.com
Toll Free: 1-800-645-5516 **In Metro NY:** 631-957-8700 **Fax:** 631-957-9142 or 631-957-3880

Lighting Description:

Storefront:

Storefront lighting will consist of modern retail lighting illuminating the reception and waiting areas from inside the dispensary. The front walkway is lighted with existing overhead lights and additional motion and security lighting will be place in accordance to Pleasant Promenade's design committee's approval.

Inside:

In addition to retail lighting the dispensary will have all exits, emergency lights, motion detecting switches for security lighting the back rooms, offices and receiving areas.

Back/Receiving:

Two (2) dual headed lights are positioned just behind our rear exit and receiving area. Plus there are lights on the building lighting the entire refuse and driveway areas.

Parking Area:

Nine (9) dual headed lights are positioned throughout the parking area and walkway.

Additional Lighting:

Walgreens to the South of the site has a very illuminated parking area and signage that sheds additional light into the area and Chase Bank to the North of the site is also well illuminated. Adjacent retail, office and other developments offer additional lighting as well.

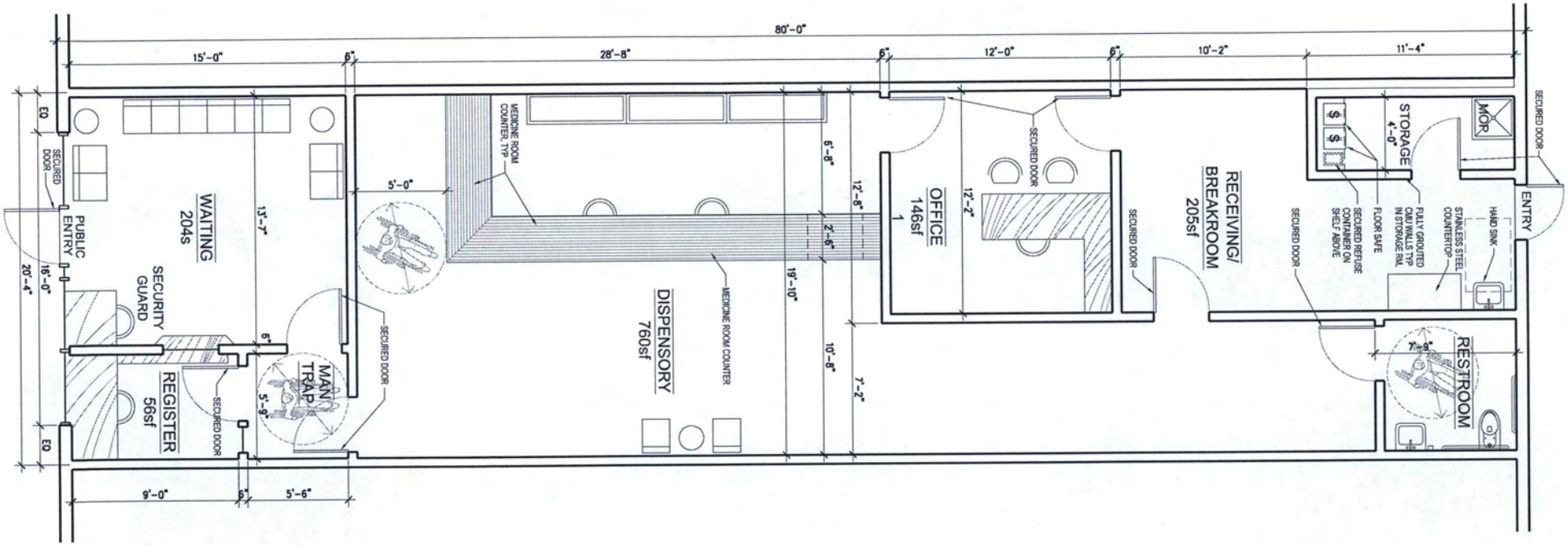

NOTE: HVAC AIR QUALITY CALCULATION
TO BE ADDRESSED BY MECHANICAL ENGINEER
DURING T.I. CONSTRUCTION/PERMIT SET

TOTAL SUITE SQUARE FOOTAGE = 1,631

FLOOR PLAN

scale" 1/8" = 1'-0"

pleasant promenade retail center
10296 WEST BEARDSLEY ROAD, SUITE 107
PEORIA, ARIZONA 85382

wxy design-architects
3364 WEST OWENS WAY
ANTHEM, ARIZONA 85086

north

REGISTERED ARCHITECT
CERTIFICATE NO.
29572
MICHAEL FRANCIS
WHALEN
Date Signed 04.26.11
ARIZONA, U.S.A.

expires on: 09.30.13

EXHIBIT F