CITY OF PEORIA SUPPLEMENT

TO

MARICOPA ASSOCIATION OF GOVERNMENTS

UNIFORM STANDARD DETAILS

CITY OF PEORIA

CONSTRUCTION

ENGINEERING DEPARTMENT
2008

CITY OF PEORIA

STANDARD DETAIL INDEX
(PAGE 1 OF 3)

000 SERIES
TRAFFIC ENGINEERING

PE-010-1	PARKWAY SECTION
PE-010-2	MAJOR ARTERIAL STREET
PE-010-3	MINOR ARTERIAL STREET
PE-010-4	MAJOR COLLECTOR ROADWAY
PE-010-5	MINOR COLLECTOR ROADWAY
PE-010-6	LOCAL ROADWAYS (PRIVATE & PUBLIC)
PE-011-1	PAVEMENT MARKING MANUAL, PAGE 1
PE-011-2	PAVEMENT MARKING MANUAL, PAGE 2
PE-011-3	PAVEMENT MARKING MANUAL, PAGE 3
PE-011-4	PAVEMENT MARKING MANUAL, PAGE 4
PE-011-5	PAVEMENT MARKING MANUAL, PAGE 5
PE-013	ARROW & BIKE SYMBOLS
PE-014	STANDARD CROSSWALK AND STOP LINES
PE-015	STANDARD RIGHT TURN BAY AND DROP LANE LAYOUT
PE-016	STANDARD LEFT TURN BAY LAYOUT
PE-017	DUAL LEFT TURN STRIPING LAYOUT
PE-018	TYPICAL MEDIAN NOSE MARKINGS
PE-020-1	PORKCHOPS - RIGHT TURN LANE
PE-020-2	PORKCHOPS - NO RIGHT TURN LANE
PE-024	FIRE DEPARTMENT ACCESS BARRIER
PE-030	PEORIA ARTERIAL SIGNAGE
PE-031	PEORIA LOCAL AND COLLECTOR SIGNAGE
PE-032	SIGN POST SPECIFICATION
PE-033	INTERCONNECT TRENCH DETAIL
PE-034	INTERCONNECT PRECAST COMMUNICATION PULL BOX
PE-035	INTERCONNECT #7 COMMUNICATION VAULT
PE-036	INTERCONNECT COMMUNICATION VAULT
PE-037-1	SIGNAL POLE FOUNDATION, MODIFIED "R" POLE PAGE 1
PE-037-2	SIGNAL POLE FOUNDATION, MODIFIED "R" POLE PAGE 2
PE-038-1	SIGNAL POLE, MODIFIED "R" POLE PAGE 1
PE-038-2	SIGNAL POLE, MODIFIED "R" POLE PAGE 2
PE-090	SIGHT DISTANCE REQUIREMENTS FOR ARTERIAL AND COLLECTOR STREETS
PE-091	UNOBSTRUCTED VIEW EASEMENT REQUIREMENTS FOR STREETS

I:\Guide\Details\CAD\Index

01/29/2008

CITY OF PEORIA

STANDARD DETAIL INDEX
(PAGE 2 OF 3)

100 SERIES
GENERAL INFORMATION

PE-100	MINIMUM REQUIREMENTS FOR GATED ENTRANCES TO RESIDENTIAL SUBDIVISIONS
PE-101	ALLOWABLE MATERIALS LIST
PE-102	CITY FACILITY SERVICE/ACCESS GATE
PE-110	WB50 TURNAROUND
PE-119	HANDRAIL DETAIL
PE-121-1	MASONRY RETAINING WALL
PE-121-2	MASONRY RETAINING WALL
PE-121-3	MASONRY RETAINING WALL
PE-146-1	SOLID WASTE VEHICLE ACCESS
PE-146-2A	SINGLE & DOUBLE-WIDE BIN ENCLOSURES
PE-146-2B	SINGLE & DOUBLE-WIDE BIN ENCLOSURES NOTES
PE-146-3	TRIPLE WIDE BIN ENCLOSURES
PE-146-4	BIN ENCLOSURE SCREEN WALL, SAFETY POST & GATE STANDARDS

200 SERIES
STREET INFORMATION

PE-210-1	SPEED HUMP
PE-210-2	SPEED TABLE
PE-210-3A	SPEED CUSHION
PE-210-3B	22' SPEED CUSHION
PE-210-3C	SPEED CUSHION PAVEMENT MARKINGS
PE-211	TRENCH PLATING
PE-241-1	SIDEWALK DUAL RAMP 25' OR 30' RADIUS CURB RETURN
PE-241-2	SIDEWALK DUAL RAMP 35' RADIUS CURB RETURN
PE-241-3	SIDEWALK RAMP NOTES
PE-251-1	RETURN TYPE DRIVEWAYS WITH ATTACHED SIDEWALK
PE-251-2	RETURN TYPE DRIVEWAYS WITH DETACHED SIDEWALK
PE-251-3	DRIVEWAY CRITERIA
PE-270	WATER VALVE ADJUSTMENT
PE-271	SEWER MANHOLE ADJUSTMENTS

I:\Guide\Details\CAD\Index

01/28/2008

CITY OF PEORIA

STANDARD DETAIL INDEX
(PAGE 3 OF 3)

300 SERIES
WATER INFORMATION

PE-351-1	CROSS CONNECTION CONTROL, 3 INCHES & LARGER REDUCED PRESSURE BACKFLOW PREVENTER
PE-351-2	CROSS CONNECTION CONTROL, 3 INCHES & LARGER REDUCED PRESSURE BACKFLOW PREVENTER
PE-352-1	CROSS CONNECTION CONTROL, 2 ½ INCHES & SMALLER REDUCED PRESSURE BACKFLOW PREVENTER (OUTSIDE INSTALLATION)
PE-352-2	CROSS CONNECTION CONTROL, 2 ½ INCHES & SMALLER REDUCED PRESSURE BACKFLOW PREVENTER (INSIDE INSTALLATION)
PE-353-1	CROSS CONNECTION CONTROL, 3 INCHES & LARGER DOUBLE CHECK VALVE ASSEMBLY
PE-353-2	CROSS CONNECTINO CONTROL, 3 INCHES & LARGER DOUBLE CHECK VALVE ASSEMBLY, NOTES
PE-355	PRESSURE VACUUM BREAKER ASSEMBLY
PE-360-1	TWO PORT WET BARREL FIRE HYDRANT INSTALLATION
PE-360-2	THREE PORT WET BARREL FIRE HYDRANT INSTALLATION
PE-361	HYDRANT/FDC CLEARANCES
PE-362	FIRE HYDRANT MARKER LOCATION
PE-363	WATER METER BOX AND COVER, LOCATION AND CONSTRUCTION
PE-371	WATER QUALITY SAMPLING STATION
PE-395	UNIVERSAL AIR-VACUUM VALVE
PE-398	TYPICAL VALVE LOCATION

400 SERIES
SEWER INFORMATION

PE-401	BEDDING & BACKFILL FOR PVC SEWER LINES
PE-402	BEDDING AND BACKFILL FOR CMP
PE-450	TYPICAL GREASE WASTE INTERCEPTOR REQUIREMENTS

500 SERIES
IRRIGATION AND STORM DRAIN INFORMATION

PE-559-1	STORM DRAIN INLET MARKER
PE-559-2	STORM DRAIN INLET MARKER ON CATCH BASIN / SCUPPER
PE-559-3	STORM DRAIN INLET MARKER ON HEADWALL

I:\Guide\Details\CAD\Index

01/28/2008

CITY OF PEORIA
STANDARD DETAIL PE-010-1
PARKWAY SECTION

APPROVALS:

CITY ENGINEER — DATE 8/2/07

FIRE CHIEF — DATE 8-16-07

PARKWAY 150' ROW

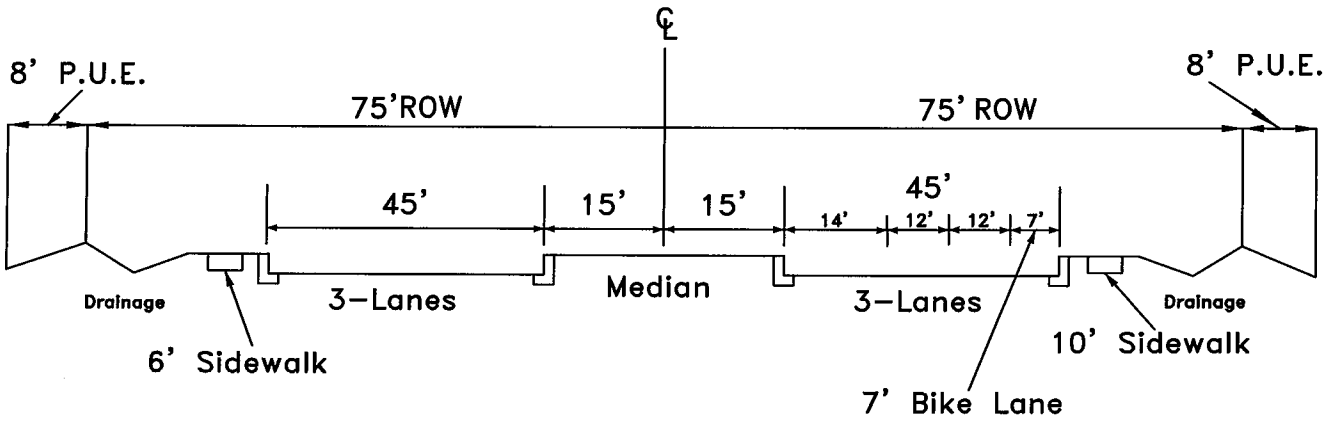

Note:

-Sidewalk shall be meandering.

-All slopes within the ROW and PUE shall be 6:1 max.

-Additional ROW may be required where additional turn lanes are required

I:\GUIDE\DETAILS\CAD\PE-010-1

08/16/2007

CITY OF PEORIA
STANDARD DETAIL PE-010-2
MAJOR ARTERIAL STREET

APPROVALS:

CITY ENGINEER — DATE 8/2/07

FIRE CHIEF — DATE 8-16-07

MULTI-LANE ROADWAY 130' ROW
Divided – 6 Travel Lanes
(6-Plus Right and Left Turn Lanes)

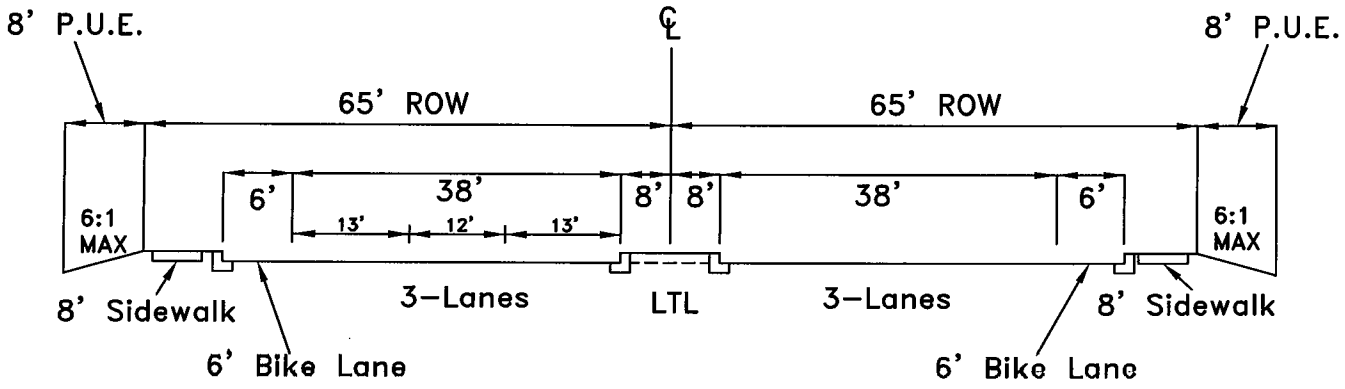

Notes:

- At intersections, ROW increases to 150' for the first 500', measured from the centerline of the intersection.
- Additional R.O.W. may be required where additional turn lanes are required.
- Sidewalks shall be meandering.

I:\GUIDE\DETAILS\CAD\PE-010-2

08/16/2007

CITY OF PEORIA
STANDARD DETAIL PE-010-3
MINOR ARTERIAL STREET

APPROVALS:

CITY ENGINEER | DATE | FIRE CHIEF | 8-16-07 DATE

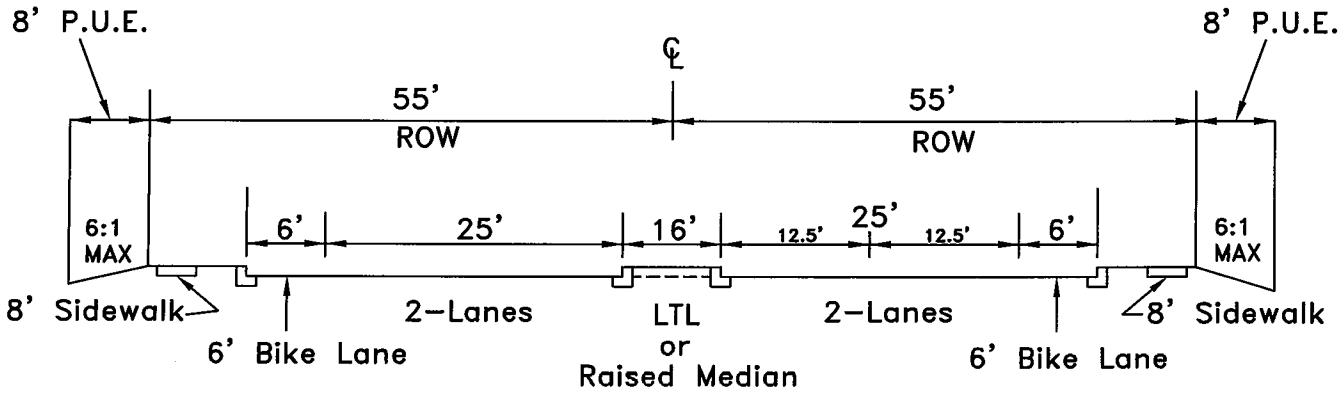

Notes:

- At intersections, ROW increases to 130' for the first 500', measured from the centerline of the intersection.
- Additional ROW may be required where additional turn lanes are needed.
- Sidewalks shall be meandering.

I:\GUIDE\DETAILS\CAD\PE-010-3

08/16/2007

CITY OF PEORIA
STANDARD DETAIL PE-010-4
MAJOR COLLECTOR ROADWAY

APPROVALS:

CITY ENGINEER — DATE 8-16-07

FIRE CHIEF — DATE

FOUR-LANE ROADWAY
Undivided
(Residential areas with backage and adjacent commercial and industrial areas)

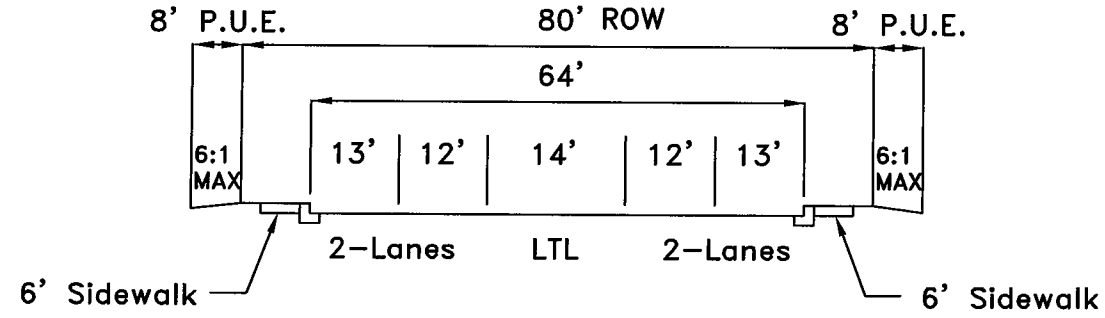

Note: Corner radii will equal 30'

I:\GUIDE\DETAILS\CAD\PE-010-4

08/16/2007

CITY OF PEORIA
STANDARD DETAIL PE-010-5
MINOR COLLECTOR ROADWAYS

APPROVALS:

CITY ENGINEER — DATE 8/24/07 — FIRE CHIEF — DATE 8-16-07

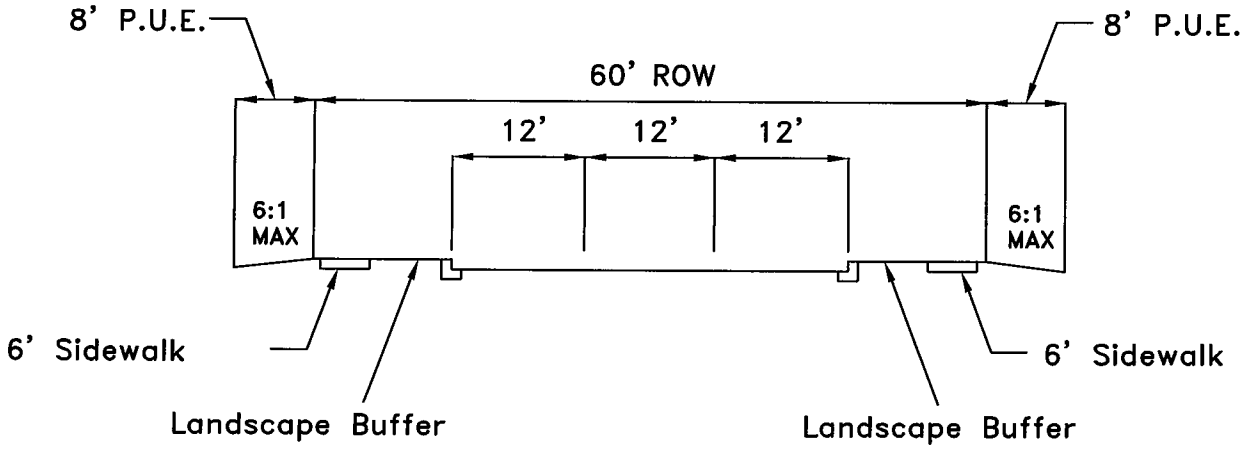

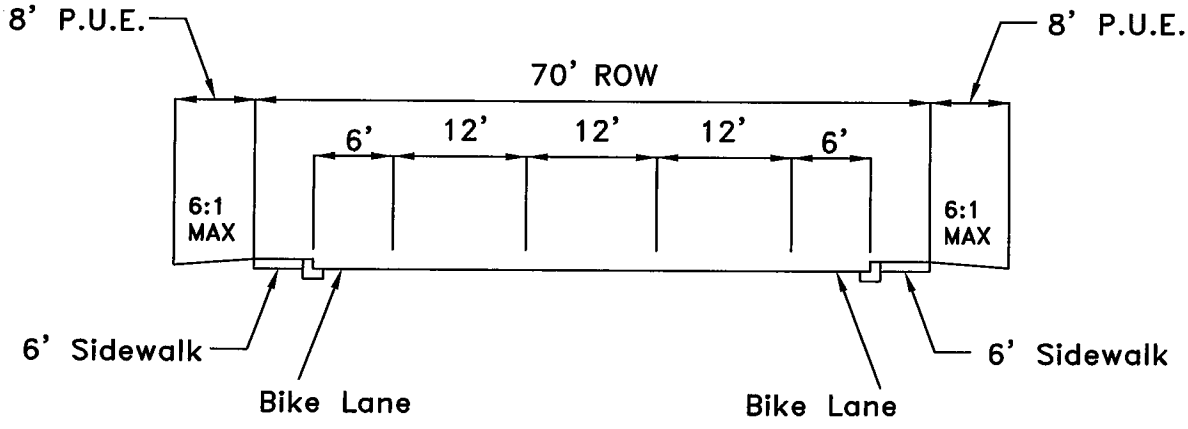

I:\GUIDE\DETAILS\CAD\PE-010-5

08/16/2007

CITY OF PEORIA
STANDARD DETAIL PE-010-6
PRIVATE AND PUBLIC ROADWAY

APPROVALS:

CITY ENGINEER — DATE 8/20/07

FIRE CHIEF — DATE 8-16-07

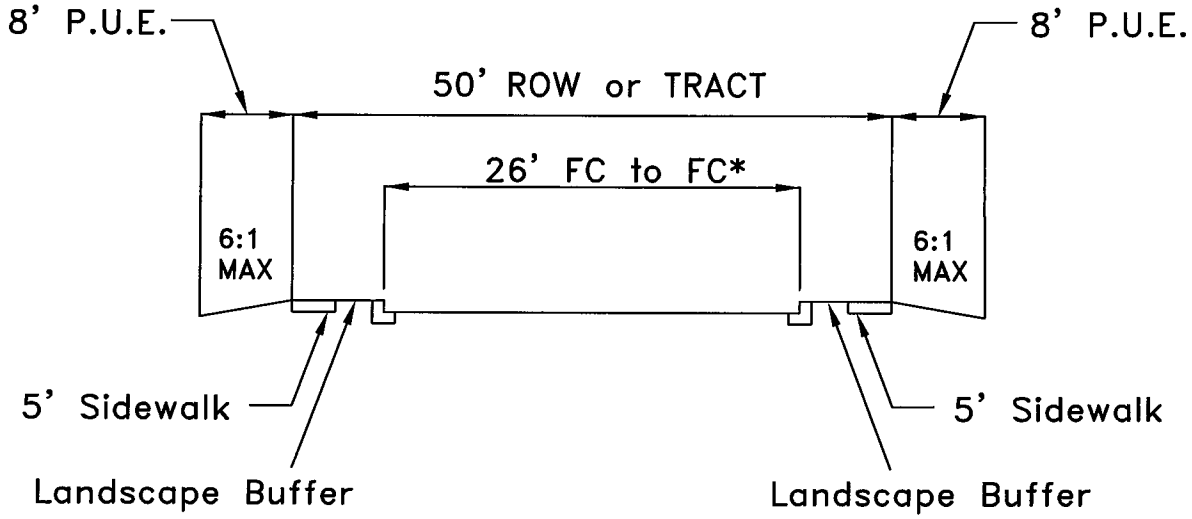

*parking on one side only
32' pavement provides parking on both sides

Note: Private Streets for Subdivisions with:
10 Lots or less, Sidewalk not required, Tract 40' + 8' P.U.E. on each side
10-20 Lots, Sidewalk required one side, Tract 45' + 8' P.U.E. on each side
More than 20 Lots,Sidewalk required both sides,Tract 50' + 8' P.U.E. on each side

GENERAL PLAN CIRCULATION ELEMENT
Policy B-3e:
The City shall discourage private streets unless the Peoria City Council determines that the streets meet the adopted standards and that the benefit to the City exceeds the liability.

I:\GUIDE\DETAILS\CAD\PE-010-6

08/16/2007

CITY OF PEORIA
STANDARD DETAIL PE-011-1
PAVEMENT MARKING MANUAL, PAGE 1

APPROVALS: David A Brady 2/22/07
CITY ENGINEER DATE

WHITE PLAN SYMBOLS

LEGEND:

4BW	4" Broken white line with a 15' line segment and a 25' gap
4SW	4" Solid white line
4DTW	4" Dashed white line with a 2' line segment and a 4' gap
8SW	8" Solid white line
12SW	12" Solid white line
24SW	24" Solid white line For use at Grade Crossings only.
6SW	6" Solid white line
8DTW	8" Dashed white line with a 3' line segment and 9' gap

I:\GUIDE\DETAILS\CAD\PE-011-1

01/19/2007

CITY OF PEORIA
STANDARD DETAIL PE-011-2
PAVEMENT MARKING MANUAL, PAGE 2

APPROVALS: _____ 2/22/07
CITY ENGINEER DATE

WHITE PLAN SYMBOLS
WITH RAISED PAVEMENT MARKERS

LEGEND:

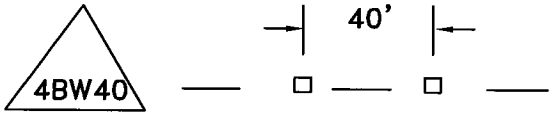

4" Broken white line with a 15' line segment and a 25' gap with type 'G' rpm's @ 40' spacing

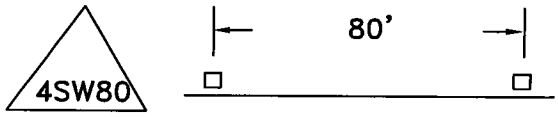

4" Solid white line with type 'G' rpm's @ 80' spacing
(For curved sections of roadway use 40" spacing)

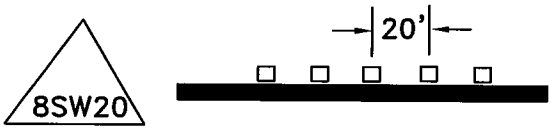

8" Solid white line with type 'G' rpm's @ 20' spacing

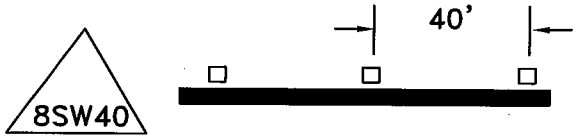

8" Solid white line with type 'G' rpm's @ 40' spacing

I:\GUIDE\DETAILS\CAD\PE-011-2

01/19/2007

CITY OF PEORIA
STANDARD DETAIL PE-011-3
PAVEMENT MARKING MANUAL, PAGE 3

APPROVALS: Donald Meady 2/22/07
CITY ENGINEER DATE

RAISED PAVEMENT MARKER TYPES

LEGEND:

Type A = White (non reflective)

Type AY = Yellow (non reflective)

Type D = Yellow, two-way (reflective)

Type G = Clear, one-way (reflective)

Type H = Yellow, one-way (reflective)

Type J = White, raised domes (reflective)

TypeJR = Yellow, raised domes (reflective)

GENERAL NOTES:

Raised pavement markers shall be placed so that the reflective face of the marker is facing and perpendicular to traffic.

I:\GUIDE\DETAILS\CAD\PE-011-3

02/05/2007

CITY OF PEORIA
STANDARD DETAIL PE-011-4
PAVEMENT MARKING MANUAL, PAGE 4

APPROVALS: Daniel Mady 2/22/07
CITY ENGINEER DATE

YELLOW PLAN SYMBOLS

LEGEND:

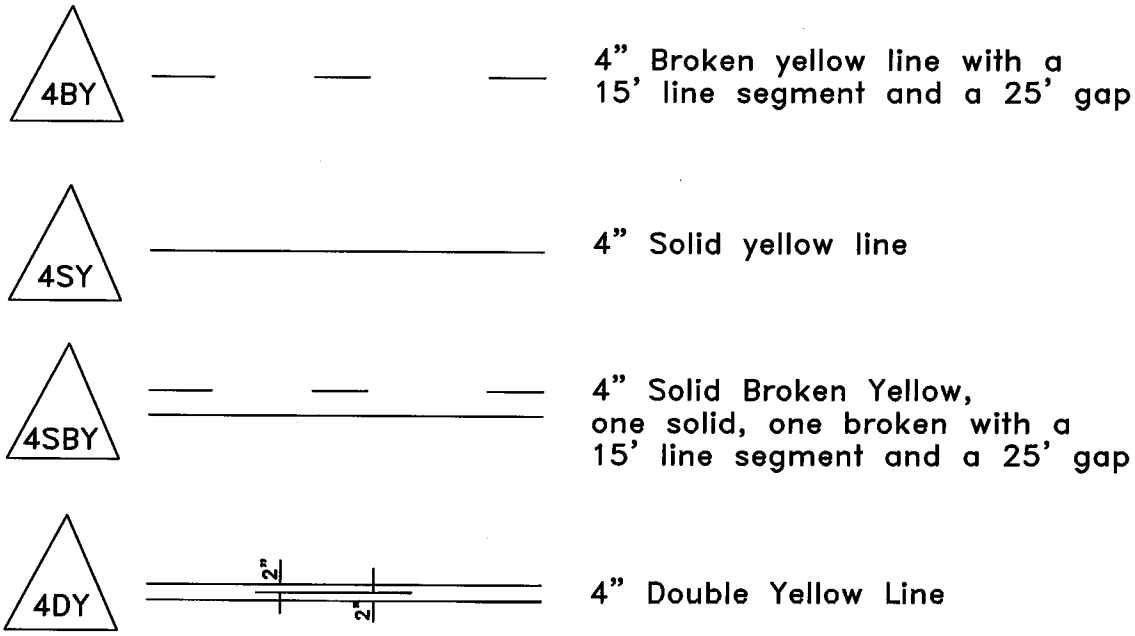

I:\GUIDE\DETAILS\CAD\PE-011-4

01/19/2007

CITY OF PEORIA
STANDARD DETAIL PE-011-5
PAVEMENT MARKING MANUAL, PAGE 5

APPROVALS: Donald Mroz 2/22/07
CITY ENGINEER DATE

YELLOW PLAN SYMBOLS WITH RAISED PAVEMENT MARKERS

LEGEND:

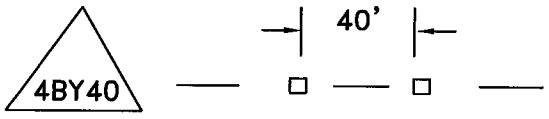

4" Broken yellow line with a 15' line segment and a 25' gap with type 'D' rpm's @ 40' spacing

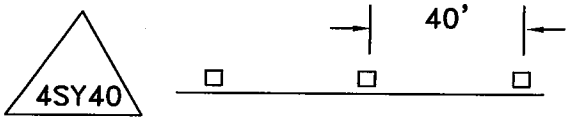

4" Solid yellow line with type "D" rpm's @ 40' spacing (For curved sections of roadway use 20' spacing.)

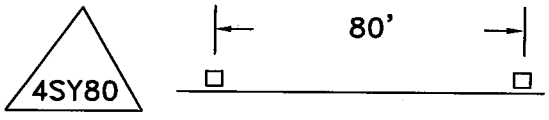

4" Solid yellow line with type "D" rpm's @ 80' spacing (For straight sections of roadway)

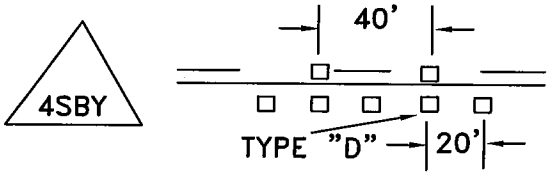

4" Solid Broken Yellow, one solid, one broken with a 15' line segment and a 25' gap, with type "D" rpm's @ a 40' spacing (broken) type "D" rpm's @ a 20' spacing (solid)

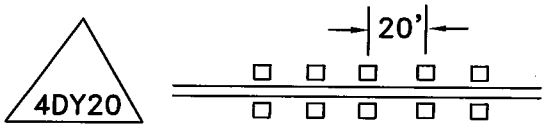

4" Double Yellow with type 'D' rpm's @ 20' spacing

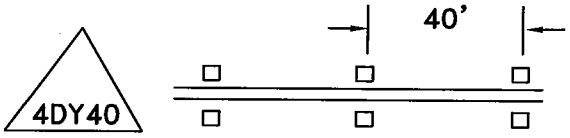

4" Double Yellow with type 'D' rpm's @ 40' spacing

I:\GUIDE\DETAILS\CAD\PE-011-5

01/22/2007

CITY OF PEORIA
STANDARD DETAIL PE-013
ARROW & BIKE SYMBOLS

APPROVALS: David J. Moore 2/22/07
CITY ENGINEER DATE

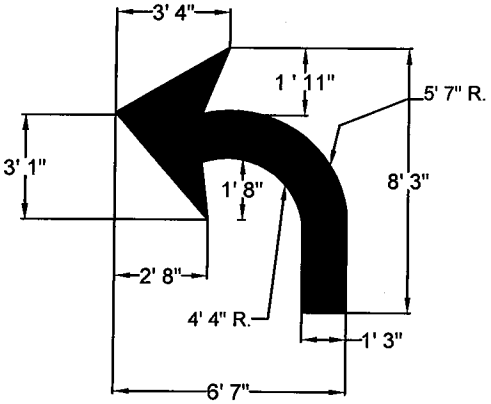

TURN LANE-USE ARROW

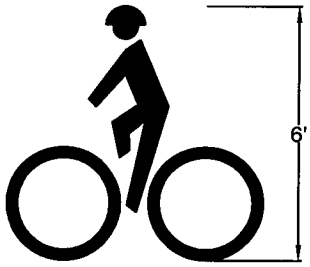

BIKE SYMBOL*

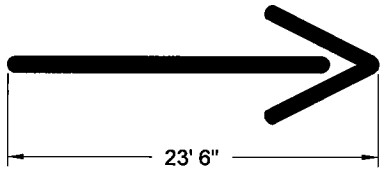

WRONG-WAY ARROW

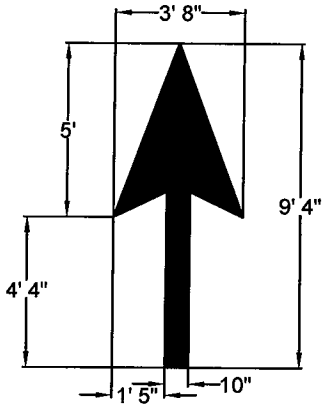

THROUGH LANE-USE ARROW

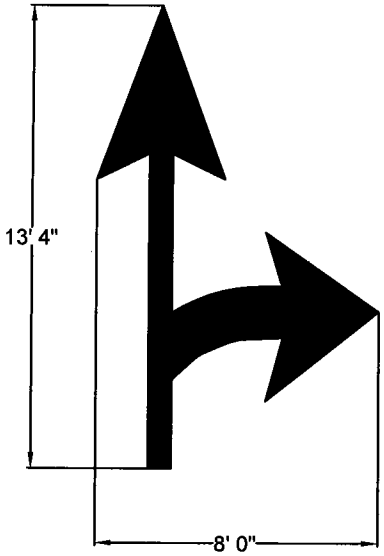

TURN AND THROUGH LANE-USE ARROW

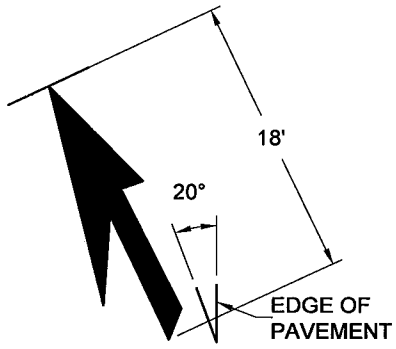

LANE-REDUCTION ARROW

*BICYCLIST TO BE FACING THROUGH TRAVEL LANES

I:\GUIDE\DETAILS\CAD\PE-013

01/22/2007

CITY OF PEORIA
STANDARD DETAIL PE-014
STANDARD CROSSWALK AND STOP LINES

APPROVALS: Dave Mady 2/22/07
CITY ENGINEER DATE

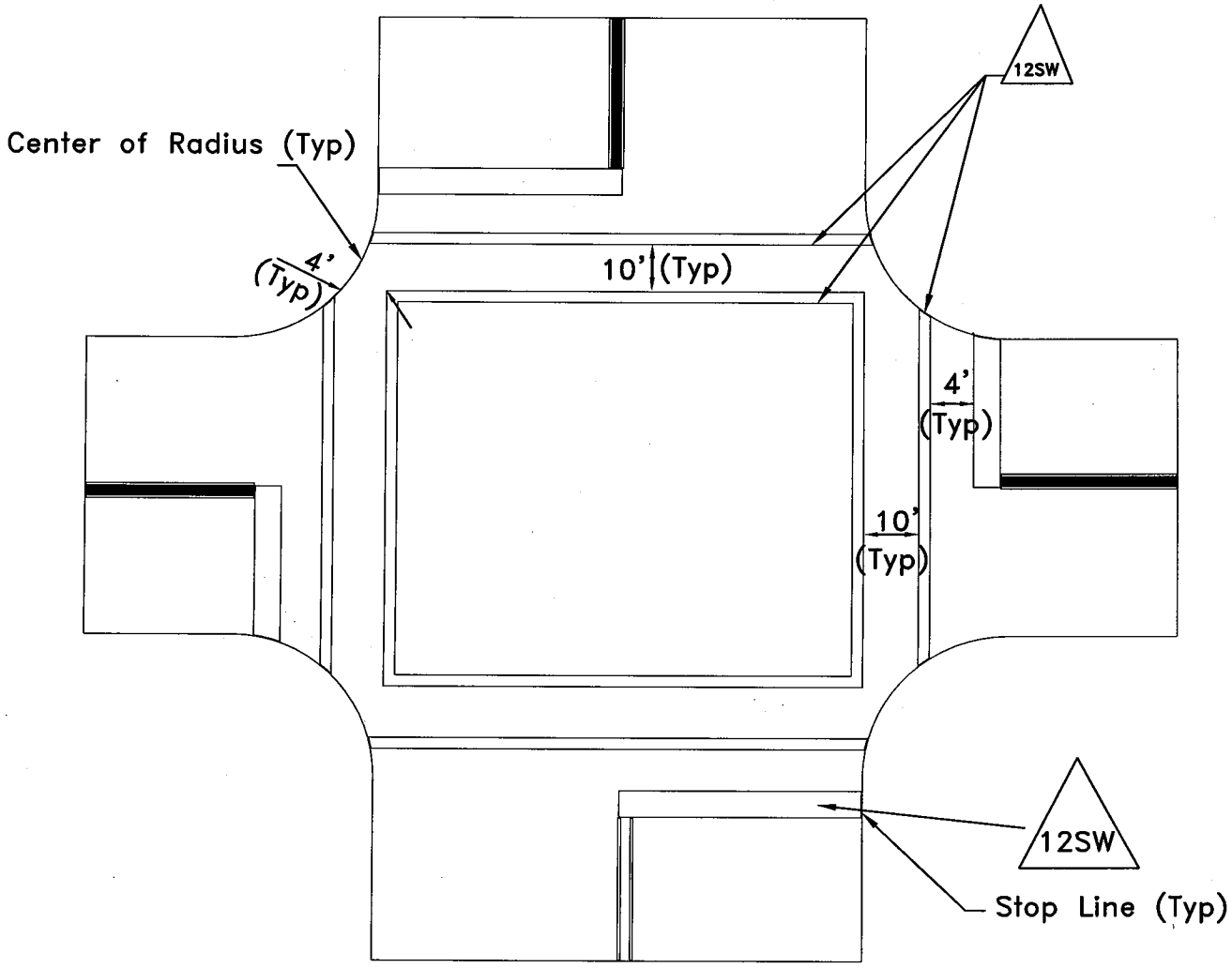

(For New Installations)
(N.T.S.)

GENERAL NOTES:

1. Marked crosswalks shall be installed at signalized intersections which include pedestrian signal indications.

2. All new crosswalk installation shall be installed based on an engineering study.

LEGEND:

12SW —— 12" Solid white line

I:\GUIDE\DETAILS\CAD\PE-014

01/22/2007

CITY OF PEORIA
STANDARD DETAIL PE-015
STANDARD RIGHT TURN BAY AND DROP LANE LAYOUT

APPROVALS: Daniel Mead 2/22/07
CITY ENGINEER DATE

*POSTED SPEED (MPH)	d** (FT)
20	225
25	325
30	450
35	550
40	650
45	750
50	850
55	950
60	1100

**EXCERPT FROM MUTCD 2003 TABLE 2C-4

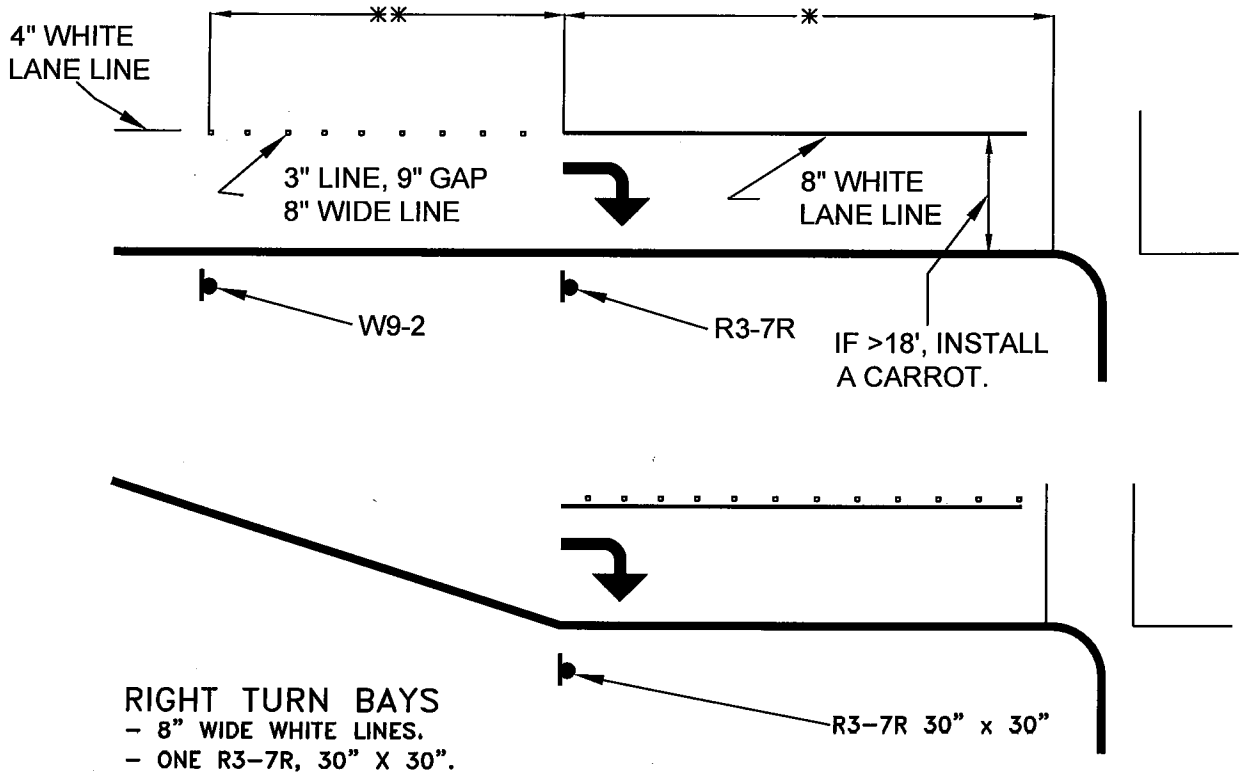

RIGHT TURN BAYS
- 8" WIDE WHITE LINES.
- ONE R3-7R, 30" X 30".
- 1 ARROW, MARKING AT BEGINNING OF BAY.
- IF BAY IS 250' OR MORE, 2ND ARROW TO BE INSTALLED AT END OF BAY.

I:\GUIDE\DETAILS\CAD\PE-015

01/22/2007

CITY OF PEORIA
STANDARD DETAIL PE-016
STANDARD LEFT TURN BAY LAYOUT

APPROVALS: _____ 1/22/07
CITY ENGINEER DATE

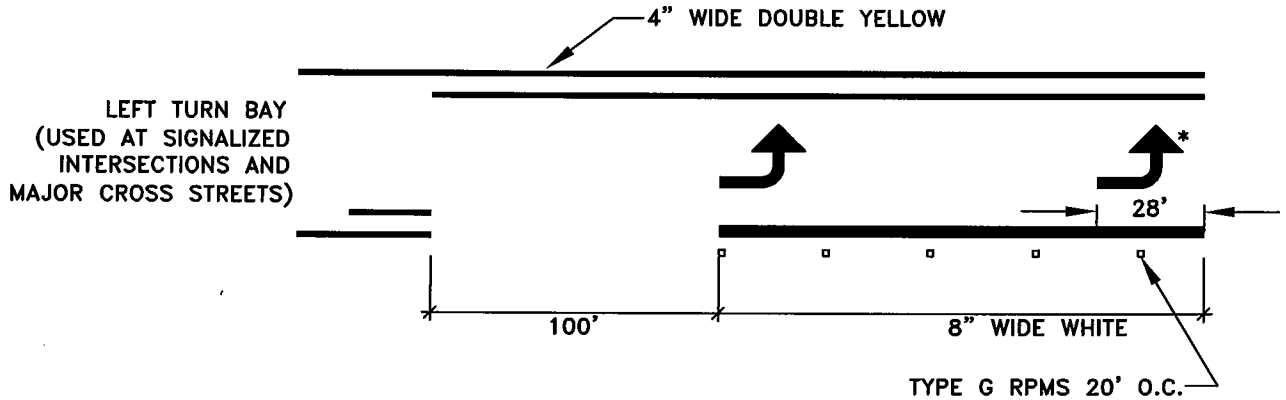

*IF BAY IS LONGER THAN 250', A SECOND ARROW IS PLACED AT THE TOP OF THE BAY.

NOTE: PAVEMENT MARKING PLAN NOTATION/SYMBOLOGY IN ACCORDANCE WITH MCDOT PAVEMENT MARKING MANUAL.

I:\GUIDE\DETAILS\CAD\PE-016

CITY OF PEORIA
STANDARD DETAIL PE-017
DUAL LEFT TURN STRIPING LAYOUT

APPROVALS: Dave Mraly 2/22/07
CITY ENGINEER DATE

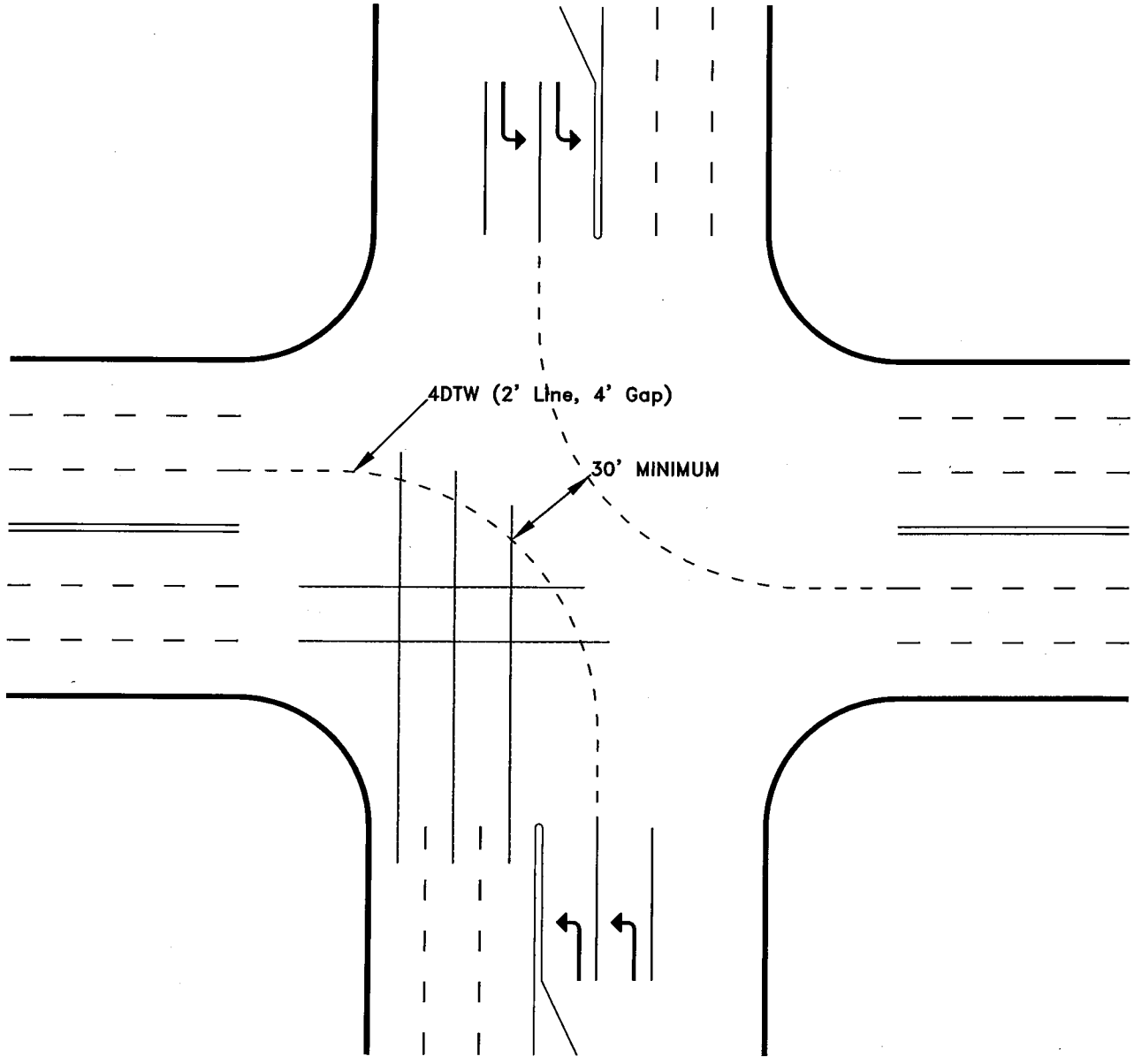

I:\GUIDE\DETAILS\CAD\PE-017

01/22/2007

CITY OF PEORIA
STANDARD DETAIL PE-018
TYPICAL MEDIAN NOSE MARKINGS

APPROVALS: _____ 1/22/07
CITY ENGINEER DATE

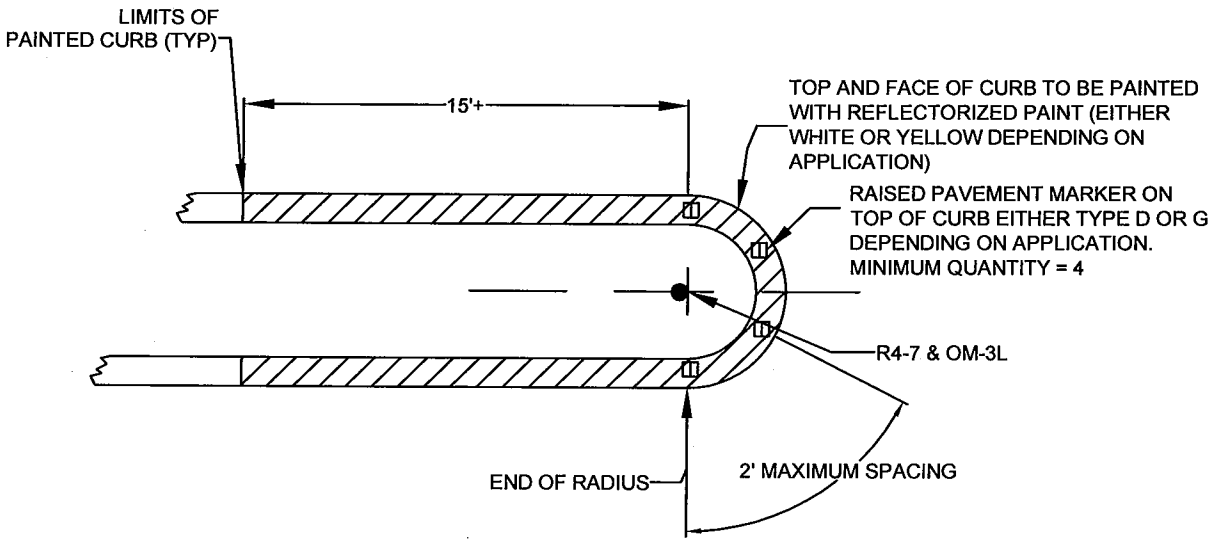

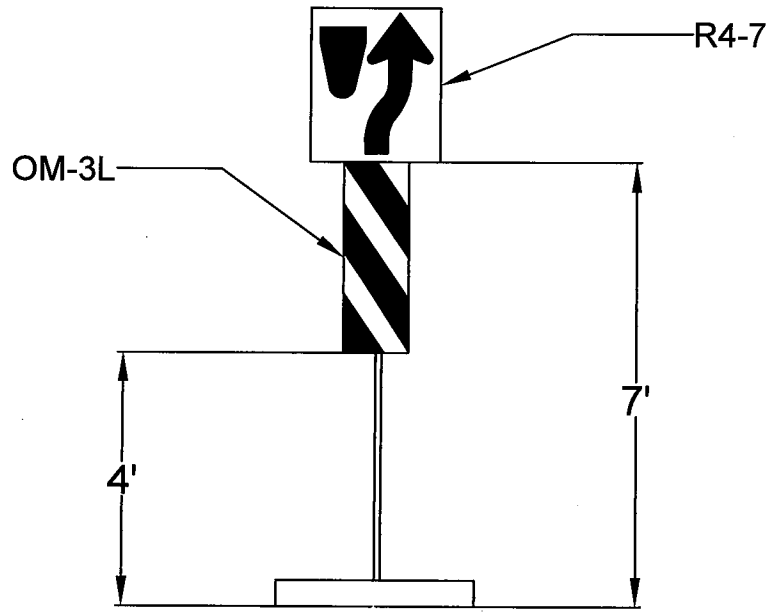

I:\GUIDE\DETAILS\CAD\PE-018

01/22/2007

CITY OF PEORIA
STANDARD DETAIL PE-020-1
PORKCHOPS - RIGHT TURN LANE

APPROVALS: David J Moos 2/22/07
CITY ENGINEER DATE

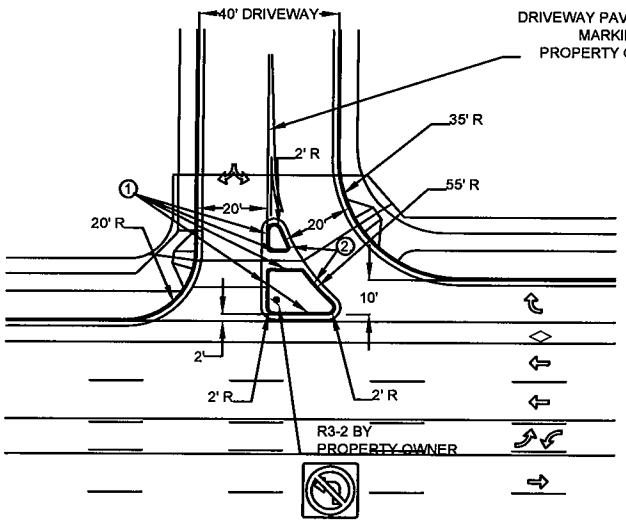

PROHIBITS LEFT TURN IN

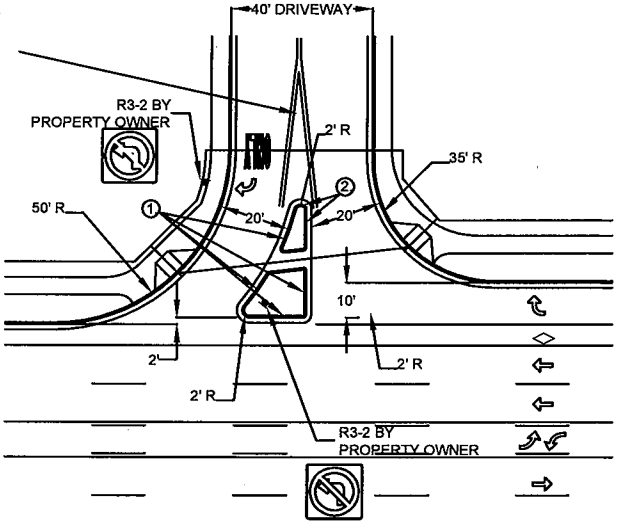

PROHIBITS LEFT TURN OUT

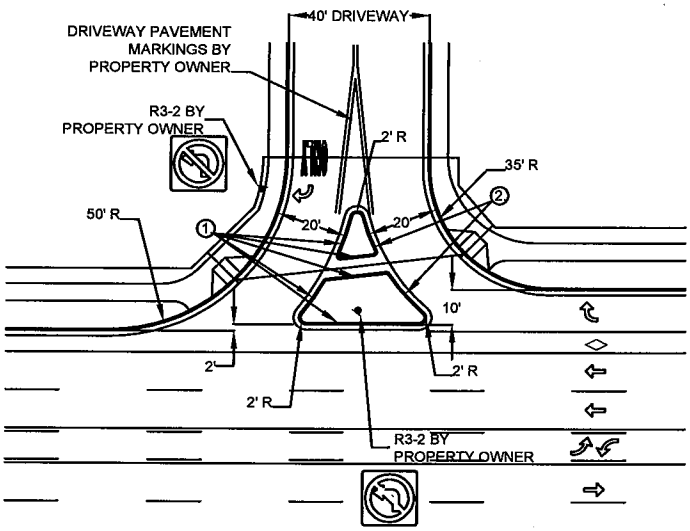

PROHIBITS LEFT TURN IN AND OUT

NOTES:
1. CURB PER MAG DETAIL 220-1, TYPE A
2. CURB PER MAG DETAIL 220-2, TYPE E

I:\GUIDE\DETAILS\CAD\PE-020-1

02/07/2007

CITY OF PEORIA
STANDARD DETAIL PE-020-2
PORKCHOPS - NO RIGHT TURN LANE

APPROVALS: David Moody 2/22/07
CITY ENGINEER DATE

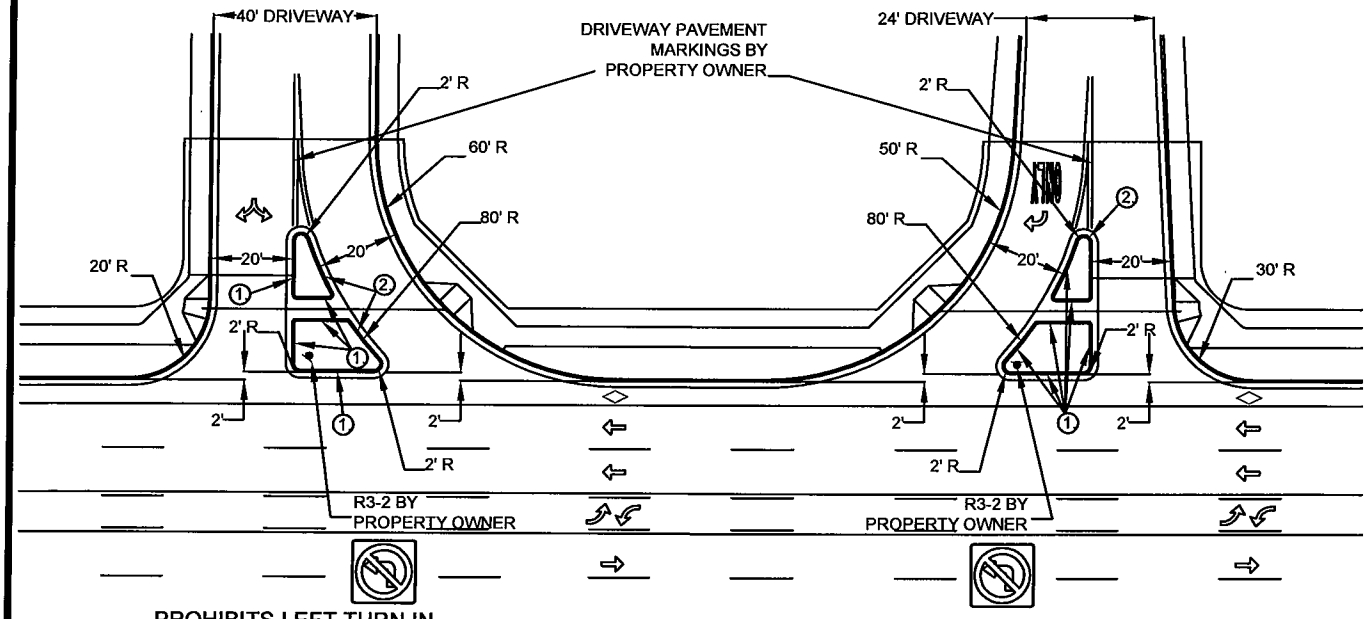

PROHIBITS LEFT TURN IN

PROHIBITS LEFT TURN OUT

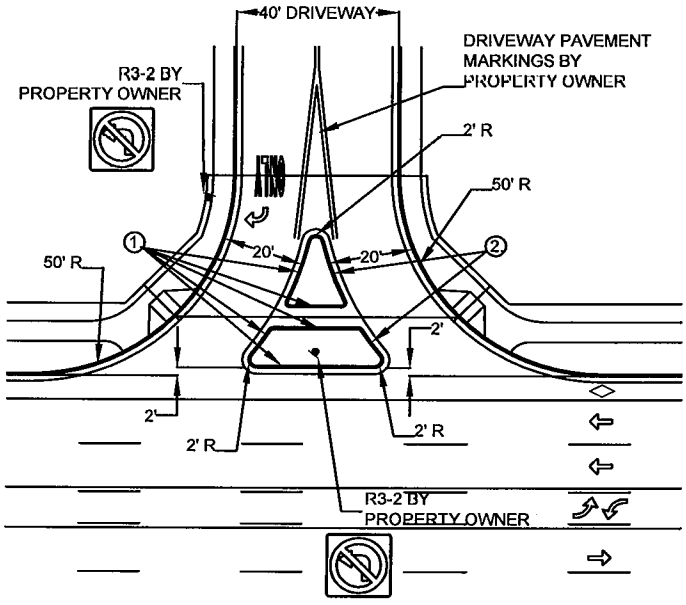

PROHIBITS LEFT TURN IN AND OUT

NOTES:
1. CURB PER MAG DETAIL 220-1, TYPE A
2. CURB PER MAG DETAIL 220-2, TYPE E

I:\GUIDE\DETAILS\CAD\PE-020-2

02/07/2007

CITY OF PEORIA
STANDARD DETAIL PE-024
FIRE DEPARTMENT ACCESS BARRIER

APPROVALS: David Mack 2/22/07
CITY ENGINEER DATE

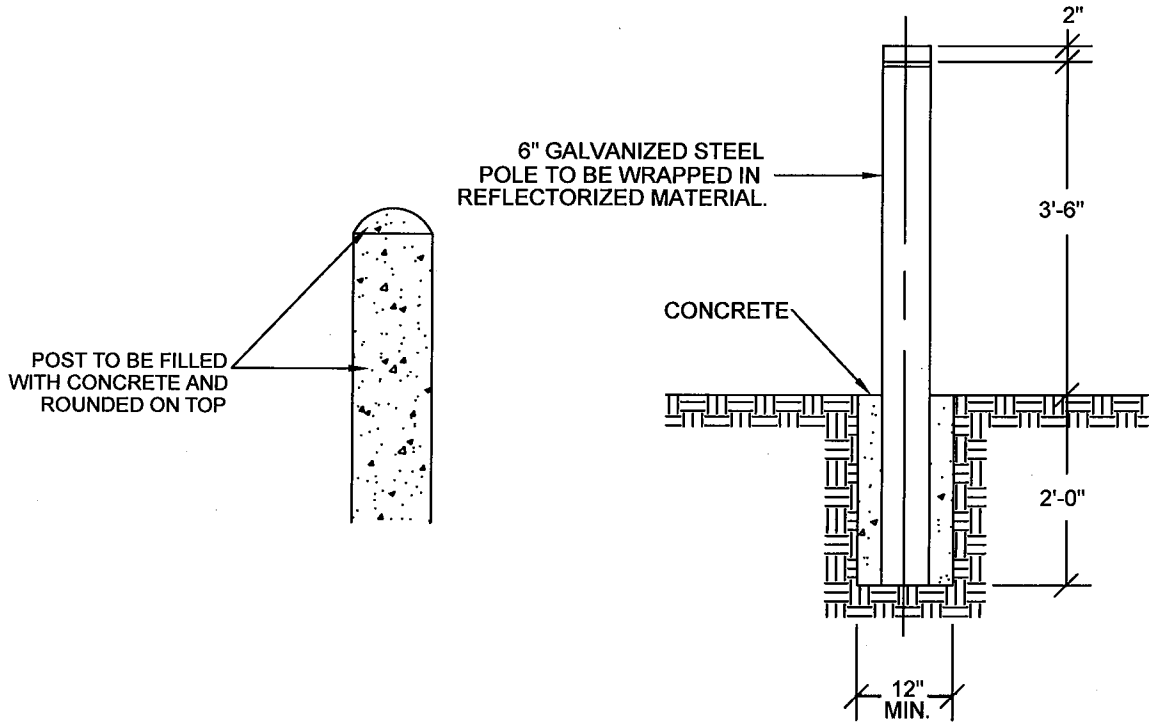

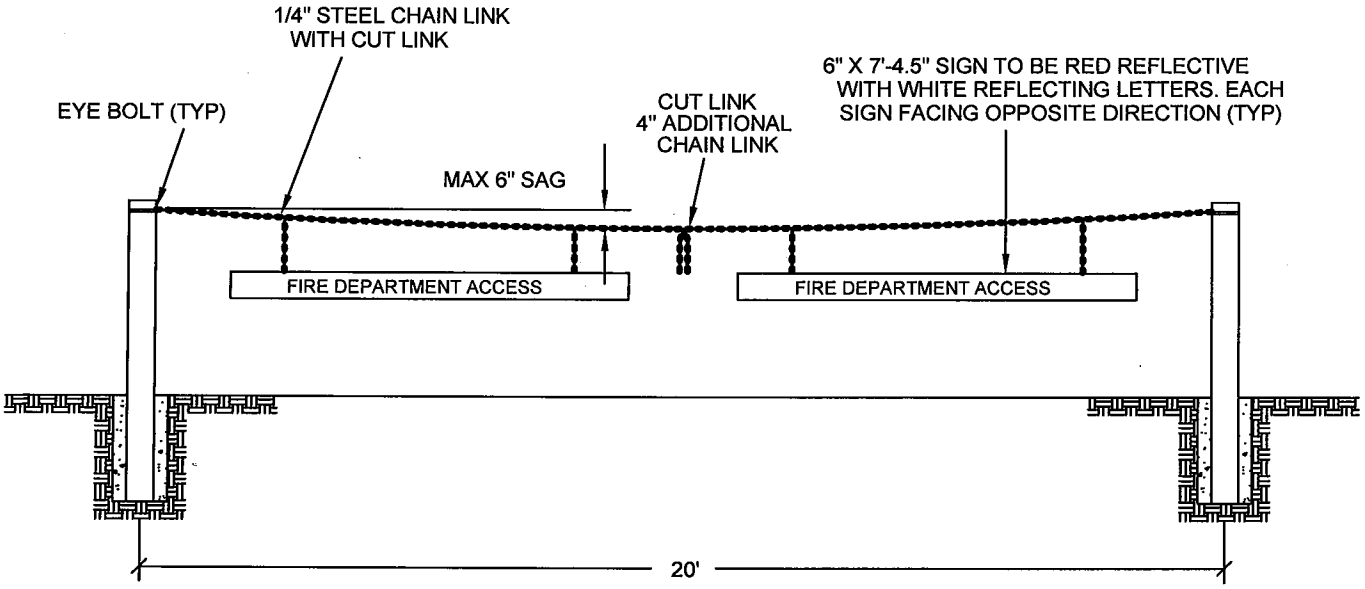

I:\GUIDE\DETAILS\CAD\PE-024

02/07/2007

CITY OF PEORIA
STANDARD DETAIL PE-030
PEORIA ARTERIAL SIGNAGE

APPROVALS: Dave Mody 2/22/07
CITY ENGINEER DATE

ADDITIONAL REQUIREMENTS:
1. FONT - HIGHWAY TYPE "C"
2. Brown Standard is 3M Scotchlite "Brown" 1179 or approved equal.
3. Reflective sheeting type - ASTM IV.

PUBLIC STREETS
Black on White
White on Brown

PRIVATE STREETS
Black on White
White on Brown

UNPAVED STREETS
Red on White

*-1" Color band on edge same color as lettering - Color band to be located on the free end

I:\GUIDE\DETAILS\CAD\PE-030

01/22/2007

CITY OF PEORIA
STANDARD DETAIL PE-031
PEORIA LOCAL & COLLECTOR SIGNAGE

APPROVALS: _____ 2/22/07
CITY ENGINEER DATE

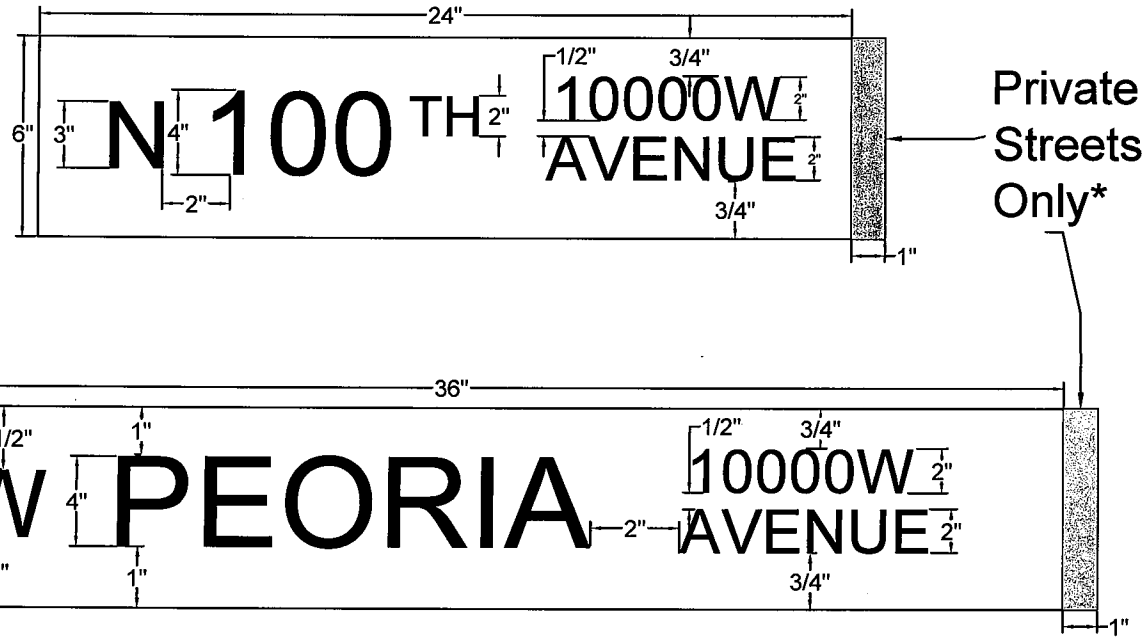

ADDITIONAL REQUIREMENTS:
1. ALUMINUM GAUGE - 0.080
2. REFLECTIVE SHEETING TYPE - ASTM IV
3. FONT - HIGHWAY TYPE "C"
4. Brown Standard is 3M Scotchlite "Brown" 1179 or approved equal.

PUBLIC STREETS
White on Brown
Black on White

PRIVATE STREETS
White on Brown
Black on White

*-1" Color band on edge same color as lettering - Color band to be located on the free end

BLANK SIZES
6" X 24"
6" X 30"
6" X 36"
6" X 42"
6" X 48"

UNPAVED STREETS
Red on White

I:\GUIDE\DETAILS\CAD\PE-031

01/22/2007

CITY OF PEORIA
STANDARD DETAIL PE-032
SIGN POST SPECIFICATION

APPROVALS: David Mraz 2/22/07
CITY ENGINEER DATE

City of Peoria requires square tubing for post mounted installations. Tubing shall have a galvanized finish and be roll form 12 gage (.105-U.S.S. gage) cold rolled steel, be perforated, and have hole size of 7/16 Inch in diameter, and 1 inch on center on all sides. All sign heights shall conform to the Manual on Uniform Traffic Control Devices.

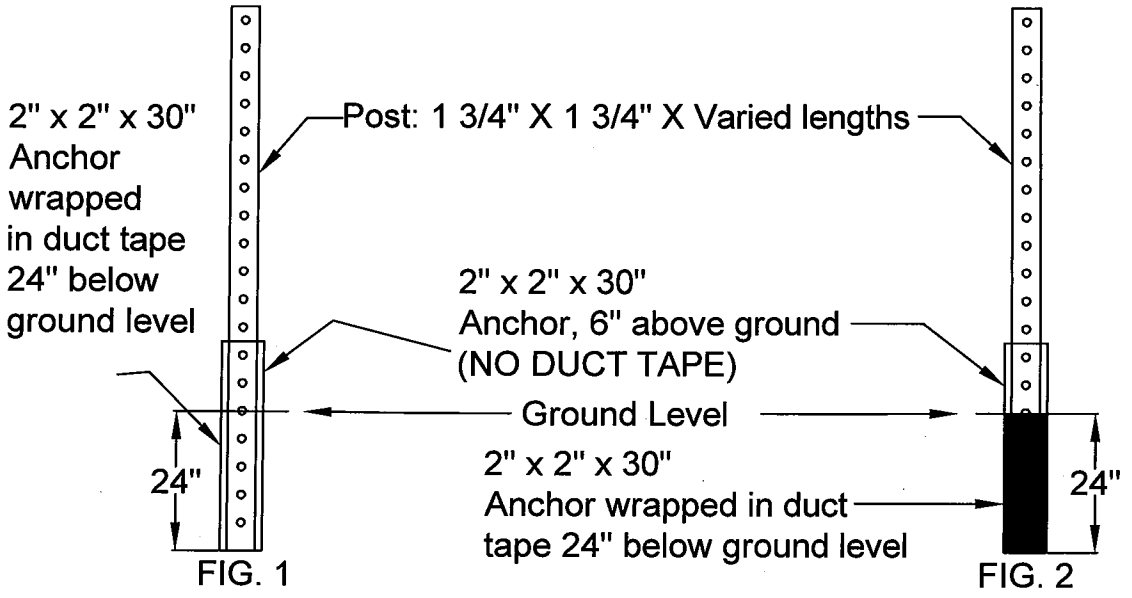

FIG. 1 FIG. 2

Post installation requires a 2" x 2" x 30" anchor to be installed pnuematically or hydraulically and shall be 24" in the ground and 6" above ground (see fig.1)

OR

Manual installation of anchor shall be 24" in ground, wrapped in duct tape to ground level, and 6" above ground without duct tape. Hole shall be 12" (max.) in diameter, 24" deep, filled with concrete to ground level. (see fig.2)

For singular signs a 1 3/4" x 1 3/4 " x 10" post is required. For multiple signs a 1 3/4" x 1 3/4" x varied length post per the Manual on Uniform Traffic Control Devices height specifications is required. For signs that exceed 42" in width, dual posts are required. Attachment of the post to the anchor requires a 5/16" x 2 1/2" grade 5 hex head bolt with a 5/16" flat washer and hex nut. Attachment of the signs to the post requires a 5/16" x 2 1/2" grade 5 hex head bolt with a 5/16" flat washer and hex nut.

I:\GUIDE\DETAILS\CAD\PE-032

CITY OF PEORIA
STANDARD DETAIL PE-033
INTERCONNECT TRENCH DETAIL

APPROVALS: Dana Mead 2/22/07
CITY ENGINEER DATE

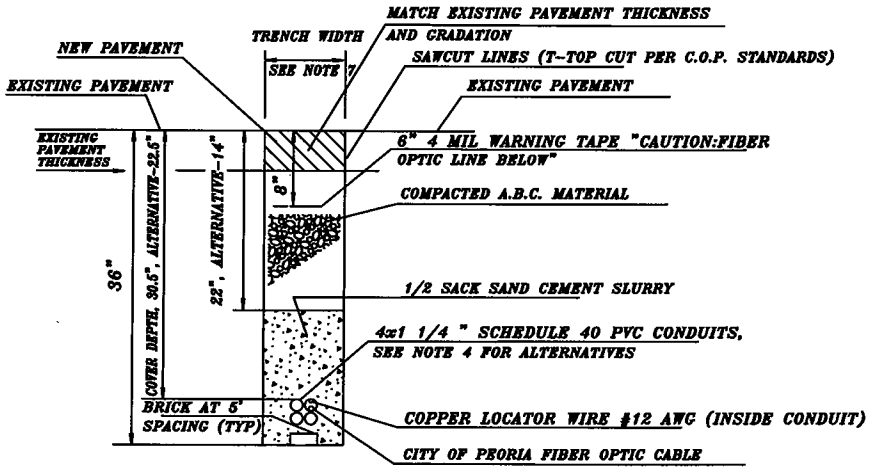

TYPICAL "A" TRENCH DETAIL FOR ASPHALT PAVEMENT — A / IT-121

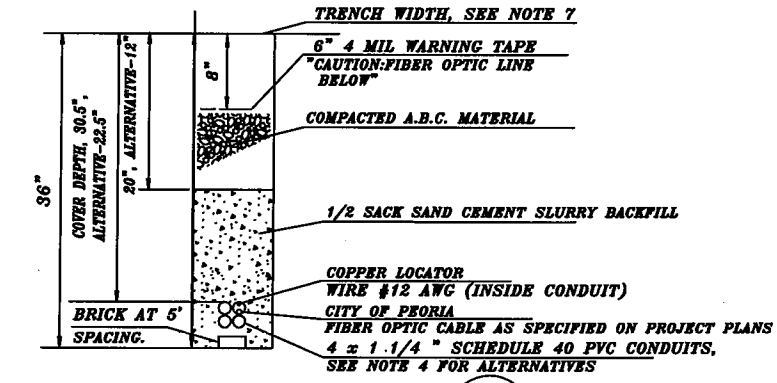

TYPICAL "B" EARTH TRENCH DETAIL — B / IT-121

NOTES:

1. TRENCH DEPTH VARIES BASED ON CONFLICTS WITH EXISTING UTILITIES.
2. BID ITEM FOR PROVIDING A TRENCH THAT IS A MINIMUM OF 36 INCHES DEEP INCLUDES INSTALLING FIBER OPTIC DUCT AND PROVIDING BACKFILL, COMPLETE IN PLACE. THIS ITEM SHALL PROVIDE A MINIMUM COVER DEPTH OF 30.5 INCHES OVER THE CONDUIT DUCT. ALL WARNING TAPE, CONDUIT SPACERS, BRICKS, AND COMPACTION WILL NOT BE PAID FOR DIRECTLY BUT SHALL BE CONSIDERED INCIDENTAL TO THE UNIT PRICE BID OF ITEM, "TRENCHING (36") AND INSTALLATION OF FIBEROPTIC DUCT, AND BACKFILL, COMPLETE, IN PLACE." AN ALTERNATIVE TRENCH DEPTH OF 28 INCHES SHALL BE INCLUDED IN THE BID PRICE UNDER ALTERNATIVE ITEM, "TRENCHING (28") AND INSTALLATION OF FIBEROPTIC DUCTS AND BACKFILL, COMPLETE, IN PLACE." THE ALTERNATIVE BID ITEM SHALL PROVIDE A MINIMUM COVER DEPTH OF 22.5 INCHES OVER THE CONDUIT DUCTS. ALL INCIDENTALS TO THE BASIC BID ITEM SHALL ALSO BE CONSIDERED INCIDENTAL TO THE ALTERNATIVE ITEM.
3. BORING SHALL BE ALLOWED WITH ENGINEERS PRIOR APPROVAL.
4. IF THE CONDUIT ROUTING IS MODIFIED TO CROSS AN EXISTING PORTLAND CEMENT CONCRETE DRIVEWAY THE CONDUITS SHALL BE PLACED BY BORING. ALL ASPHALT DRIVEWAYS MAY BE TRENCHED.
5. ALL CONDUIT BENDS SHALL BE CONCRETE ENCASED FOR A MINIMUM OF TWO (2) FEET BEYOND EACH END OF THE BEND.
6. A 1/2 SACK OF CEMENT SLURRY BACKFILL SHALL BE USED WHEN BACKFILLING CONDUITS INSTALLED IN A TRENCH IN EARTH. CLASS "A" CONCRETE SHALL BE USED AS BACKFILL FOR ALL CONDUITS INSTALLED UNDER PAVEMENT. CONDUITS SHALL BE SUPPORTED AND ANCHORED IN THE TRENCH PRIOR TO BACKFILLING WITH THE CEMENT SLURRY OR CLASS "A" CONCRETE. LOCATOR WIRE SHALL HAVE A 5 FOOT SERVICE LOOP AND BE SPLICED IN EACH PULL BOX.
7. TRENCH WIDTH MAY NOMINALLY VARY FROM 6" TO 8" BUT SHALL NOT EXCEED 12 INCHES.
8. A SINGLE CONTINUOUS INSULATED COPPER LOCATOR WIRE AWG #12 SHALL BE INSTALLED INSIDE ONE OF THE CONDUITS ALONG THE ENTIRE LENGTH OF THE CONDUIT RUN. WIRE SHALL HAVE A FIVE FOOT SERVICE LOOP IN EACH PULL BOX. IF A CRIMPED SPLICE IS REQURED IT SHALL BE DONE IN THE PULL BOX ONLY AND "NOT" IN THE CONDUIT RUN.
9. PROVIDE 3/4 INCH WIDE 2500 LBF MULE PULL TAPE IN ALL CONDUITS FOR THE ENTIRE LENGTH OF THE CONDUIT RUN.
10. CONTRACTOR SHALL MAINTAIN A TEN TO ONE VARIANCE OF THE CONDUIT ALIGNMENT DURING INSTALLATION.

I:\GUIDE\DETAILS\CAD\PE-033

02/05/2007

CITY OF PEORIA
STANDARD DETAIL PE-034
INTERCONNECT PRECAST COMMUNICATION PULL BOX

APPROVALS: Donald Mraby 2/22/07
CITY ENGINEER DATE

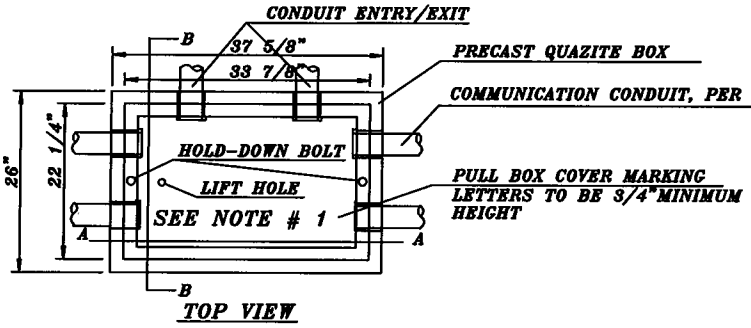

TOP VIEW

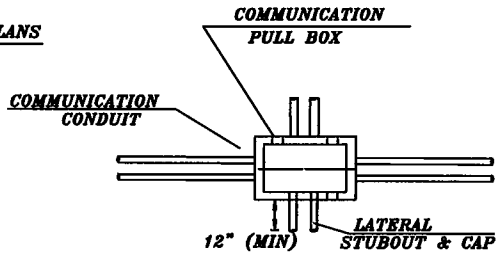

DETAIL C

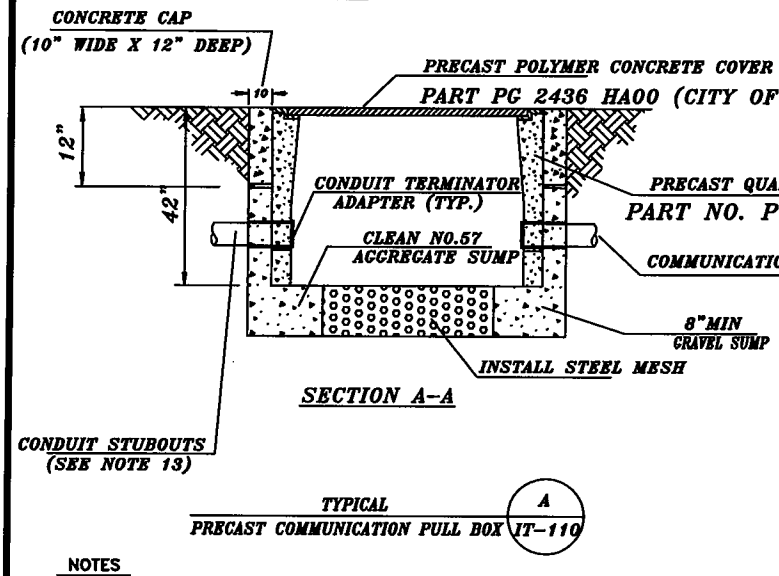

SECTION A-A

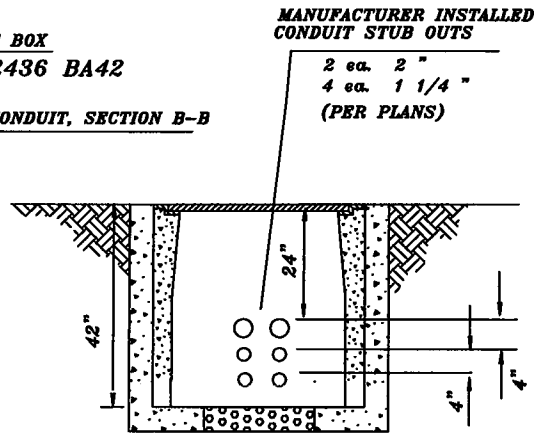

SECTION B-B

TYPICAL PRECAST COMMUNICATION PULL BOX — A IT-110

NOTES

1. PULL BOX SHALL BE PROVIDED WITH COVER AND SPECIAL CONCRETE CAP. COVER SHALL HAVE EMBOSSED NO-SKID PATTERN AND BE LABELED "CITY OF PEORIA TRAFFIC SIGNAL COMMUNICATIONS".
2. TOPS OF PULL BOXES SHALL BE FLUSH WITH SURROUNDING GRADE OR TOP OF ADJACENT CURB, EXCEPT IN UNPAVED AREAS WHERE PULL BOX IS NOT IMMEDIATELY ADJACENT TO AND PROTECTED BY A CONCRETE FOUNDATION, POLE OR OTHER PROTECTIVE CONSTRUCTION, THE BOX SHALL BE PLACED WITH ITS TOP 0.75 INCH ABOVE SURROUNDING GRADE. WHERE PRACTICAL, PULL BOXES SHOWN IN THE VICINITY OF CURBS SHALL BE PLACED ADJACENT TO THE BACK OF CURB, AND PULL BOXES SHOWN ADJACENT TO STANDARDS SHALL BE PLACED ON SIDE OF FOUNDATION FACING AWAY FROM TRAFFIC, UNLESS OTHERWISE NOTED.
3. ALL COVERS SHALL BE INTERCHANGEABLE BETWEEN BOXES. TOP OUTSIDE EDGE OF ALL CONCRETE COVERS AND PULL BOXES SHALL HAVE A 0.25 INCH MIN. RADIUS.
4. WHEN PULL BOX IS INSTALLED BY SIDEWALK AREA, THE DEPTH OF THE BOX SHALL BE ADJUSTED SO THAT THE TOP OF THE BOX IS FLUSH WITH THE TOP OF THE SIDEWALK.
5. PULL BOX SHALL NOT BE WITHIN THE BOUNDARIES OF NEW OR EXISTING WHEELCHAIR RAMPS.
6. ALL BENDS SHALL BE FACTORY BENDS.
7. CONTRACTOR SHALL ADAPT CONDUIT STUBOUTS FOR SPECIFIC PROJECT REQUIREMENTS. AS A MINIMUM,
8. PULL BOX SHALL BE PREDRILLED AND CONDUIT TERMINATOR ADAPTORS SHALL BE INSTALLED BY THE MANUFACTURER PER DETAIL "C" AND SECTION DIAGRAM B-B. IN LOCATION AND QUANTITY AS DESIGNATED IN PLANS
9. CONTRACTOR SHALL MAINTAIN A 10 TO 1 VARIANCE OF THE CONDIT ALIGNMENT DURING INSTALLATION. CONDUIT SHALL CONNECT TO THE BOX STUBOUTS WITH OUT BENDS GREATER THAN THE 10 TO 1 VARIANCE.
10. SEE SPECIAL PROVISIONS REGARDING HOLD DOWN BOLTS FOR TRAFFIC COVERS.
11. TERMINATORS FOR COMMUNICATION DUCTS AND LATERAL STUBOUTS SHALL BE PROVIDED.
12. STUBOUTS SHALL BE 12" IN LENGTH.
13. ALL DIMENSIONS ARE NOMINAL AND SHALL BE CONSIDERED MINIMUM. ANY VARIATIONS MUST BE PRE-APPROVED.
14. ALL GROUND CONNECTIONS SHALL BE COATED WITH OXIDATION PROHIBITING COMPOUND.
15. ALL CABLE STRAPS SHALL BE DESIGNED TO WITHSTAND ULTRA-VIOLET EXPOSURE.
16. PROVIDE RACKING AND MOUNTING HARDWARE FOR FIBER OPTIC CABLE.
17. PROVIDE PLUGS FOR ALL UNUSED CONDUITS.

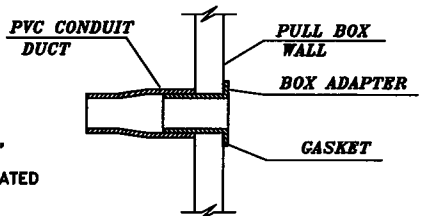

MANUFACTURER INSTALLED CONDUIT TERMINATOR ADAPTER

NOTE:
WITH RIGID METAL CONDUIT USE THREADED NIPPLE AND LOCKING COLLAR INSIDE BOX WITH GASKET.

I:\GUIDE\DETAILS\CAD\PE-034

01/22/2007

I:\GUIDE\DETAILS\CAD\PE-035

CITY OF PEORIA
STANDARD DETAIL PE-035
INTERCONNECT #7 COMMUNICATION PULLBOX

APPROVALS:

CITY ENGINEER _____ DATE 2/22/07

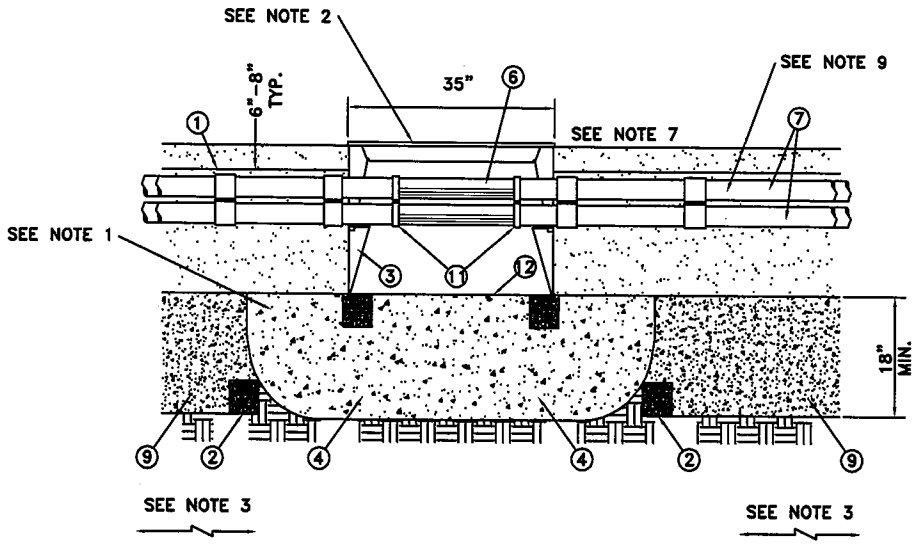

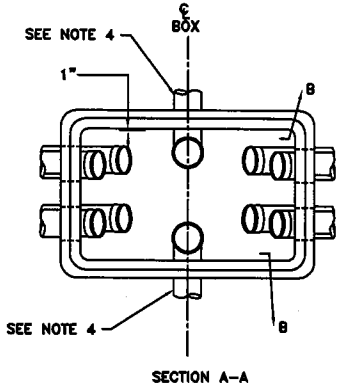

SECTION A-A

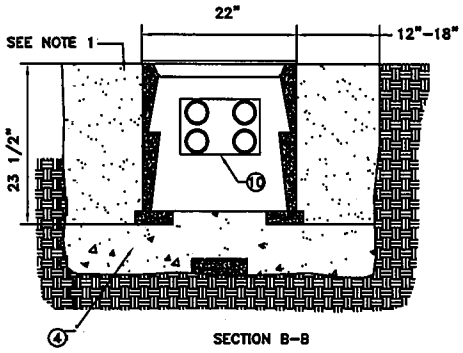

SECTION B-B

MATERIAL LIST	
ITEM	DESCRIPTION
①	WARNING TAPE
②	CONCRETE BUILDING BLOCK 2" X 4" X 8"
③	NO. 7 PULLBOX WITH EXTENSION W/ EXCEPTIONS AS DRAWN
④	CLASS "B" CONCRETE AGGREGATE DESIGNATED SIZE NO. 57
⑤	NOT USED
⑥	COMMUNICATION CABLES (SEE NOTE 6)
⑦	4 X 1 1/4" SECHEDULE 40 P.V.C. CONDUIT DUCT BANK OR AS SPECIFIED ON PLANS
⑧	NOT USED
⑨	HALF SACK SLURRY
⑩	KNOCK OUT 6" X 12" - SEE NOTE 10
⑪	BELL END FOR PVC - SEE NOTE 9
⑫	METAL SCREENED MESH

CONSTRUCTION NOTES

NOTES:

1. BACKFILL WITH DESIGNATED SIZE NO. 57 AGGREGATE TO BOTTOM OF THE PULL BOX. BACKFILL AROUND SIDES OF THE PULL BOX WITH SELECT EXCAVATED MATERIAL AND THOROUGHLY COMPACT.
2. THIS BOX IS DESIGNED FOR NON-TRAFFIC AREAS. BOX AND COVER SHALL BE CONCRETE OR COMPOSITE. COVERS SHALL BE SECURED WITH 3/8"BOLTS,NUTS & WASHERS, WHICH WILL BE OF BRASS, STAINLESS STEEL OR OTHER CORROSION RESISTANT MATERIAL. STAINLESS STEEL SHALL HAVE A CHROMIUM CONTENT OF NOT LESS THAN 18% AND A NICKEL CONTENT OF NOT LESS THAN 8%. NUTS SHALL BE RECESSED BELOW TOP SURFACE OF COVER.
3. CONDUIT FROM THE TYPICAL TRENCH SECTION SHALL NOT DEFLECT BY MORE THAN 1"/FT. FROM THE ALIGNMENT PRECEDING OR FOLLOWING THE PULL BOX.
4. LATERAL CONDUITS AS REQUIRED.
5. CONDUIT C/L SHALL BE ALIGNED TO TOP EDGE OF PULL BOX TO FACILITATE CABLE PULLING.
6. COMMUNICATIONS CABLE SHALL BE TAGGED WITH CABLE IDENTIFICATION.
7. NUMBERS IN CIRCLES REFER TO ITEMS IN MATERIAL LIST.
8. CITY OF PEORIA TRAFFIC SIGNAL COMMUNICATION SHALL BE THE TITLE EMBOSSED ON THE LID. COVER LETTERING SHALL BE 1" MINIMUM LETTERS.
9. USE PVC TO EXTEND INTO PULL BOX.
10. USE METAL SCREENED MESH TO BLOCK OPENING BETWEEN CONDUITS.
11. POUR CONTROLLED LOW STRENGTH MATERIAL UP TO WITHIN 12" OF PULLBOX
12. REFER TO T-453 FOR ALL PULL BOX DIMENSIONS EXCEPT KNOCK-OUT.
13. WHERE PULL BOXES ARE INSTALLED IN CONCRETE AREA, 1/2" PREMOLDED EXPANSION JOINT SHALL BE INSTALLED AROUND THE PULL BOX.
14. REFER TO PLANS FOR NUMBER OF CONDUITS TO BE INSTALLED.
15. Install pull boxes at 660 foot intervals

01/22/2007

CITY OF PEORIA
STANDARD DETAIL PE-036
INTERCONNECT COMMUNICATION VAULT

APPROVALS: David Mack 2/22/07
CITY ENGINEER DATE

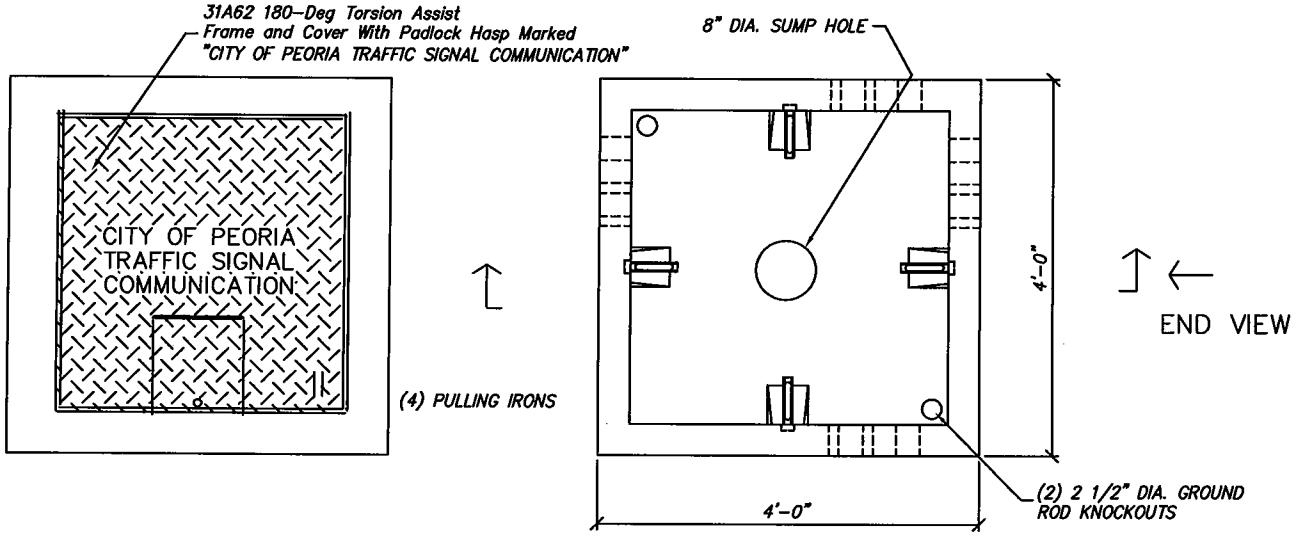

PLAN VIEW WITH COVER

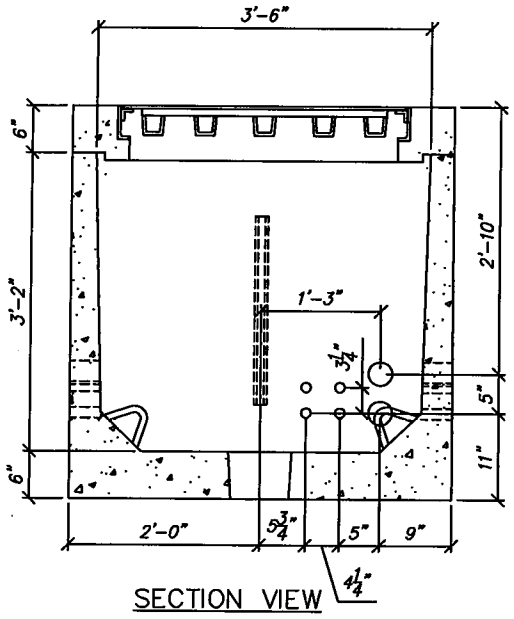

SECTION VIEW

PLAN VIEW

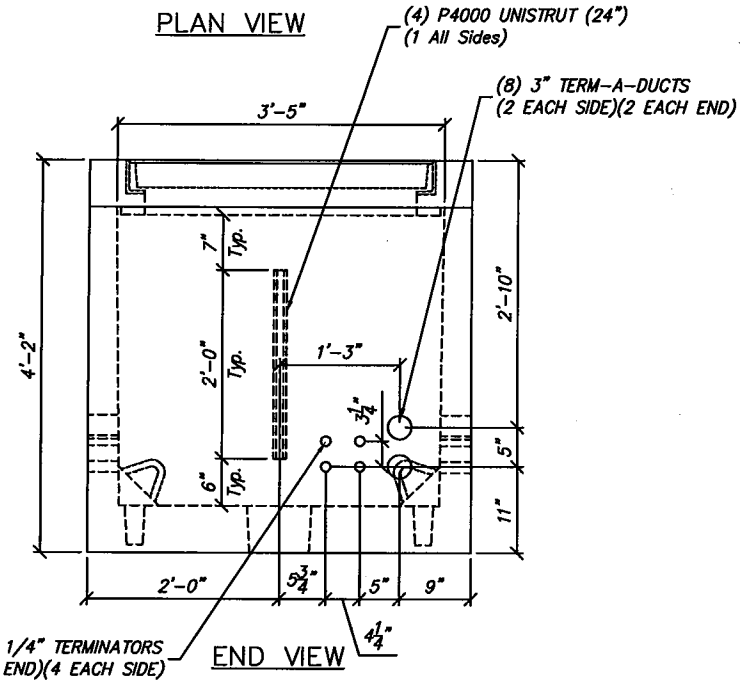

END VIEW

STRUCTURAL NOTES:

1.) CONCRETE: 28 DAY COMPRESSIVE STRENGTH F'C = 4500 PSI
2.) REBAR: ASTM A-615 GRADE 60
3.) MESH: ASTM A-185 GRADE 65
4.) DESIGN: ACI-318-99 BUILDING CODE
ASTM C-857 "MINIMUM STRUCTURAL DESIGN
LOADING FOR UNDERGROUND PRECAST CONCRETE
UTILITY STRUCTURES"
5.) LOADS: HS20 WHEEL LOADING IN OFF-STREET LOCATIONS WHERE NOT
SUBJECTED TO HIGH DENSITY TRAFFIC
80 PCF LATERAL LIVE LOAD SURCHARGE - UP TO 8'-0" DEPTH
SOIL: 40 PCF LATERAL SOIL PRESSURE ABOVE WATER TABLE
80 PCF LATERAL SOIL PRESSURE BELOW WATER TABLE
120 PCF SOIL DENSITY

GENERAL NOTES:

1.) ALL JOINTS SHALL BE SEALED USING CONSEAL CS-101 BUTYL RUBBER ROPE.
2.) PROVIDE RACKING AND MOUNTING HARDWARE FOR THE FIBER OPTIC CABLE.
3.) PROVIDE CONDUIT PLUGS IN ALL UNUSED CONDUITS
4.) PROVIDE AND INSTALL A 10' GROUND ROD, CONNECT TO LOCATE WIRE AND TO GROUND TERMINAL OF SPLICE ENCLOSURES

Racking Package

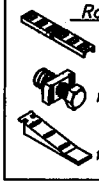

I:\GUIDE\DETAILS\CAD\PE-036

01/22/2007

CITY OF PEORIA
STANDARD DETAIL PE-037-1
SIGNAL POLE FOUNDATION, MODIFIED "R" POLE
PAGE 1 OF 2

APPROVALS: _____ _____
CITY ENGINEER DATE

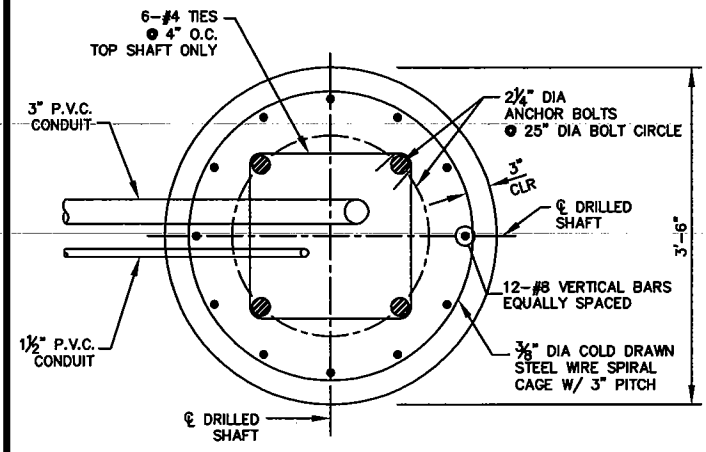

SECTION "A-A"

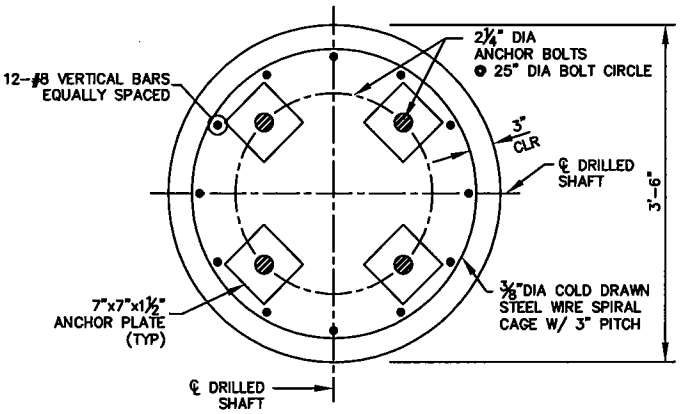

SECTION "B-B"

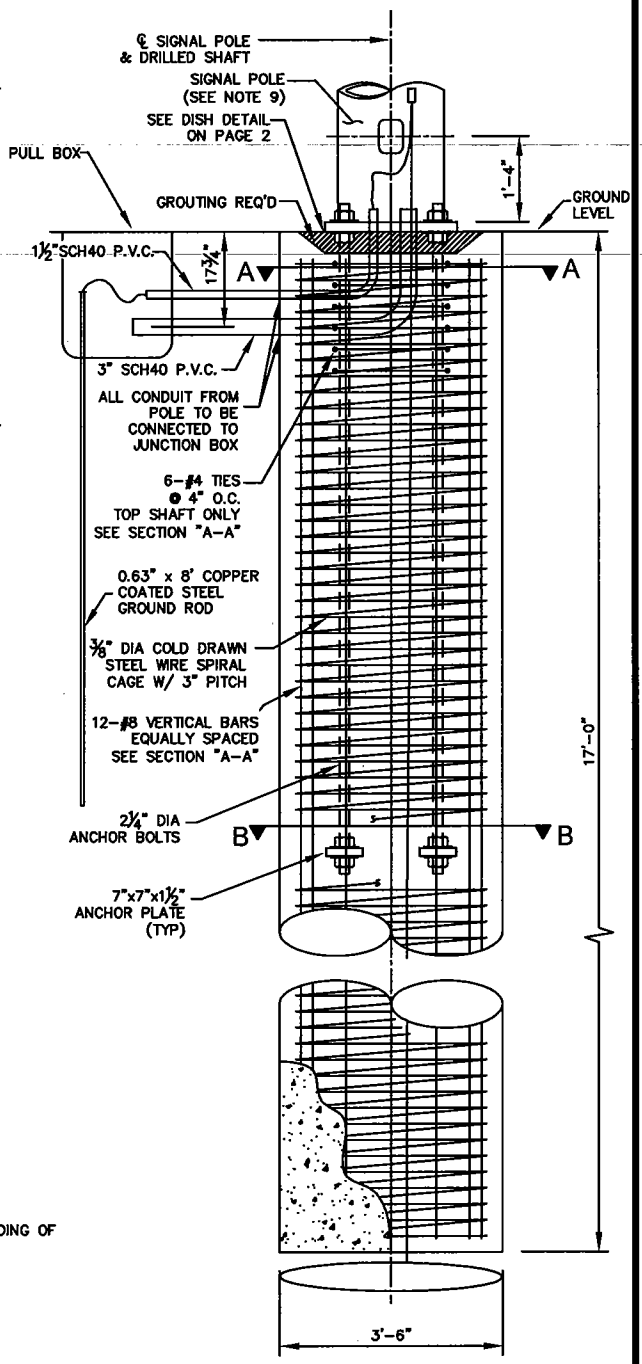

NOTES:

1. ALL FOUNDATIONS SHALL BE CAST IN PLACE AGAINST UNDISTURBED EARTH. WELDING OF REINFORCING STEEL PROHIBITED.
2. A CIRCULAR FORM SHALL BE USED FOR THE TOP 17¾" ONLY.
3. BOLTS TO BE SQUARE WITH ROADWAY OR AT ANGLE SHOWN ON PLANS.
4. PLACE ALL CONDUIT IN SAME TRENCH WHERE POSSIBLE.
5. ALL FOUNDATIONS SHALL BE 42" DIA 17'-0" FEET DEEP.
6. CONCRETE FOR FOUNDATION SHALL BE CLASS "A" (AE) F'C=3,000 PSI.
7. ANCHOR BOLTS SHALL CONFORM TO MINIMUM REQUIREMENTS OF ASTM A 307. ANCHOR BOLT SHALL NOT BE WELDED TO THE REINFORCING STEEL. THE NUTS, WASHERS, AND THE TOP 10" OF THE ANCHOR BOLTS SHALL BE GALVANIZED IN ACCORDANCE WITH ASTM A 153.
8. CAP CONDUIT ON BOTH ENDS PRIOR TO INSTALLATION.
9. FOUNDATION ACCOMMODATES MODIFIED R POLE SHOWN IN PEORIA DETAIL: PE-038

01/14/2008

I:\Guide\Details\CAD\ PE-037-1

CITY OF PEORIA
STANDARD DETAIL PE-037-2
SIGNAL POLE FOUNDATION, MODIFIED "R" POLE
PAGE 2 OF 2

APPROVALS: Dave Mead 3/10/08
CITY ENGINEER DATE

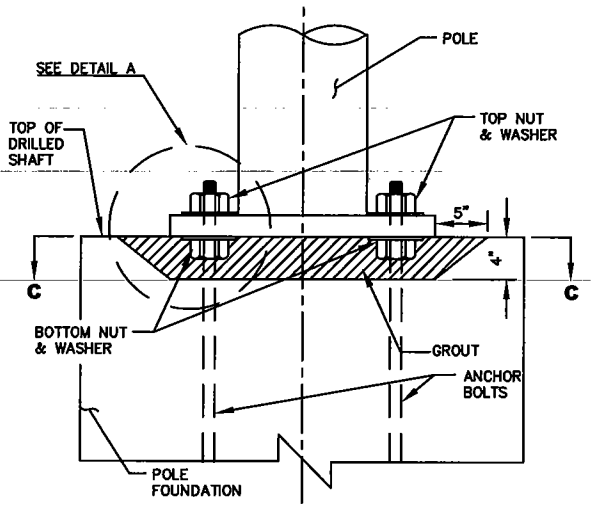

SIDE VIEW
POLE FOUNDATION - DISH DETAIL

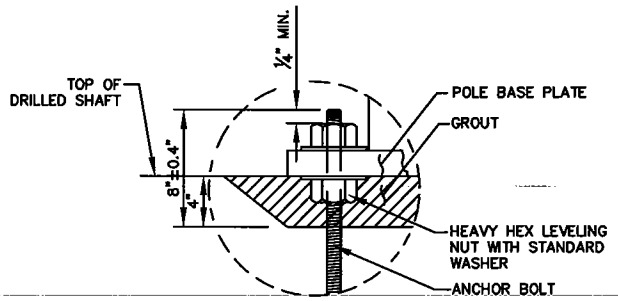

DETAIL "A"

1. BOTTOM OF POLE SHALL SIT FLUSH WITH TOP OF POLE FOUNDATION OR SIDEWALK.
2. AFTER POLE IS LEVELED GROUT IS TO BE INSTALLED FLUSH WITH TOP OF FUNDATION OR SIDEWALK.

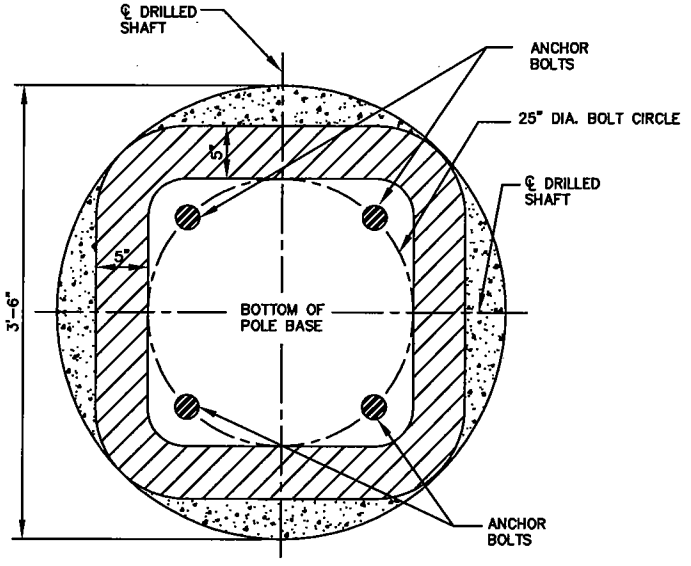

SECTION C-C
POLE FOUNDATION - DISH DETAIL

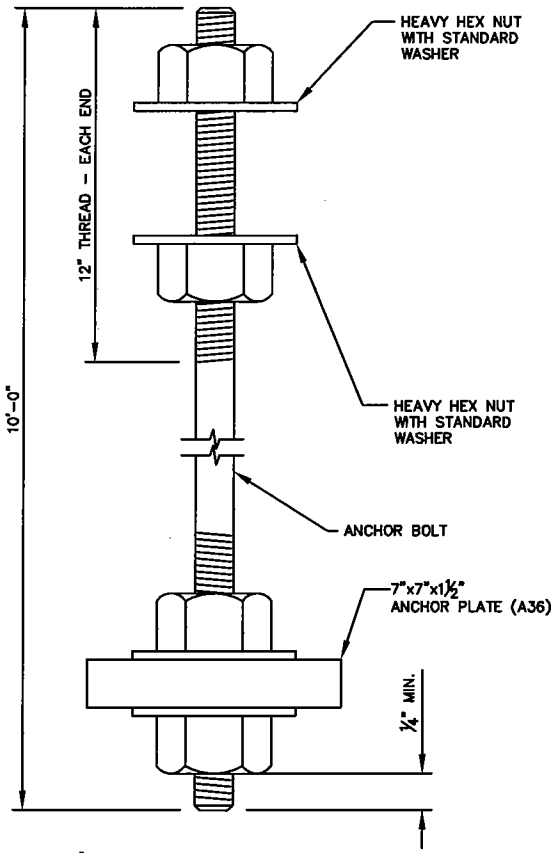

2¼" DIA ANCHOR BOLT ASSEMBLY (4 REQUIRED)

I:\Guide\Details\CAD\ PE-037-2

01/14/2008

CITY OF PEORIA
STANDARD DETAIL PE-038-1
SIGNAL POLE, MODIFIED "R" POLE

APPROVALS: David Mack 3/16/08
CITY ENGINEER DATE

	DEVICE	DESCRIPTION
(A)	SIGNAL	12' SECTION W/6" BACK PLATE
(B)	SIGN	REGULATION 24" x 36"
(C)	SIGN	ILLUMINATED STREET NAME SIGN

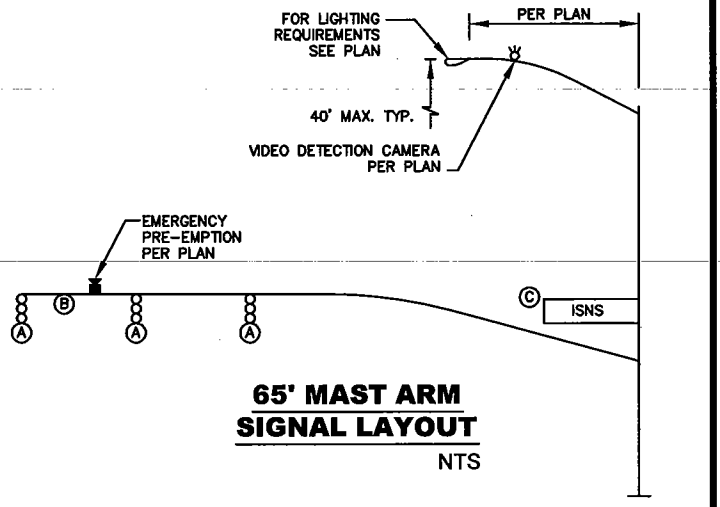

65' MAST ARM SIGNAL LAYOUT
NTS

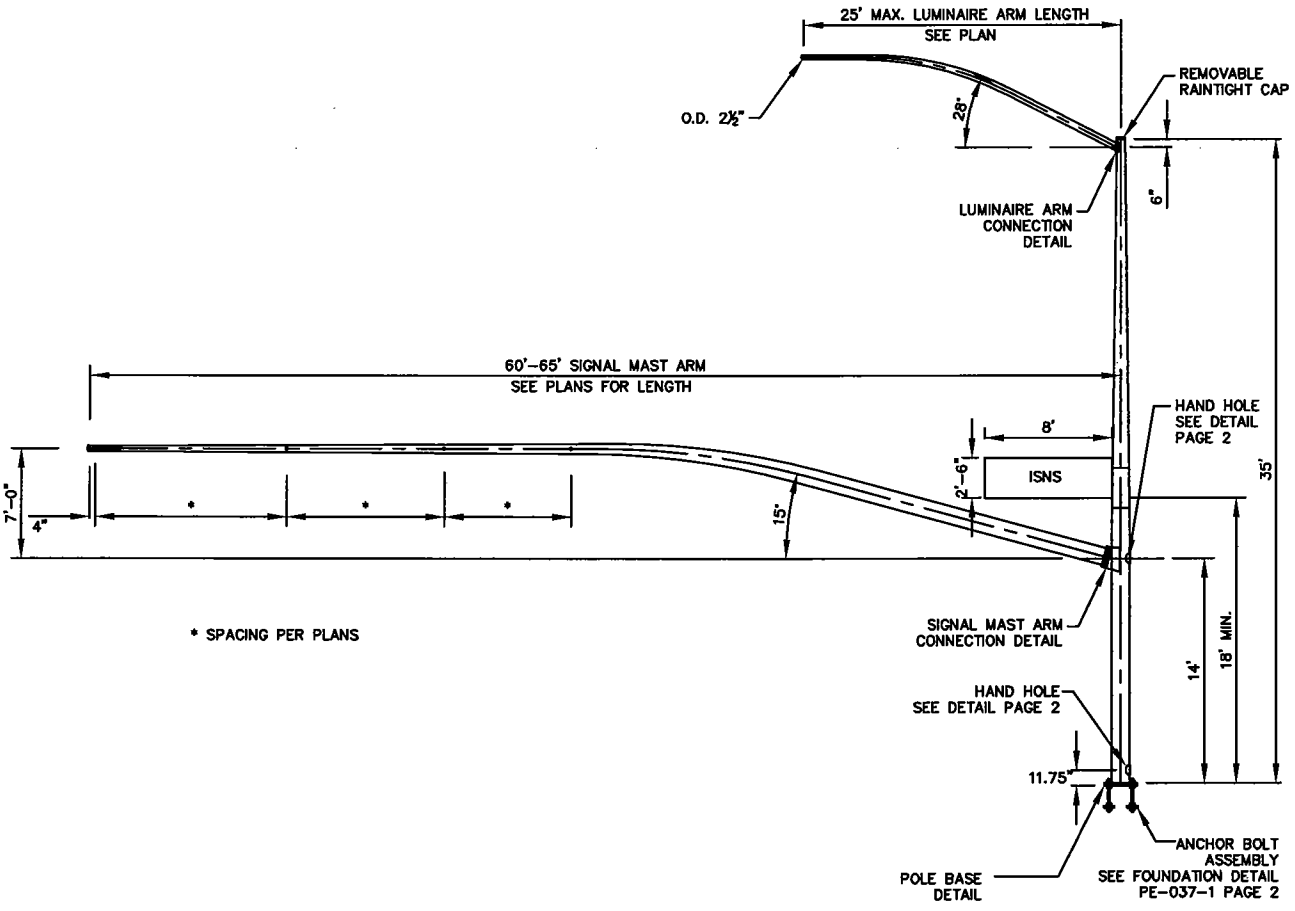

I:\Guide\Details\CAD\ PE-038-1

01/14/2008

CITY OF PEORIA
STANDARD DETAIL PE-038-2
SIGNAL POLE, MODIFIED "R" POLE

APPROVALS: _____ CITY ENGINEER _____ DATE

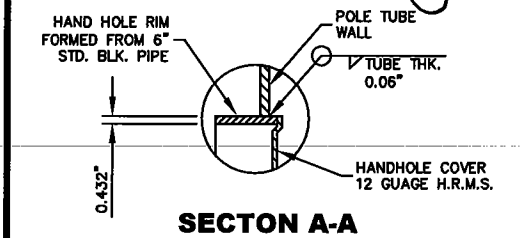

SECTON A-A

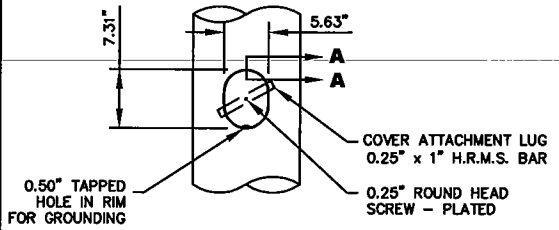

FLUSH HAND HOLE CASTING DETAIL

NTS

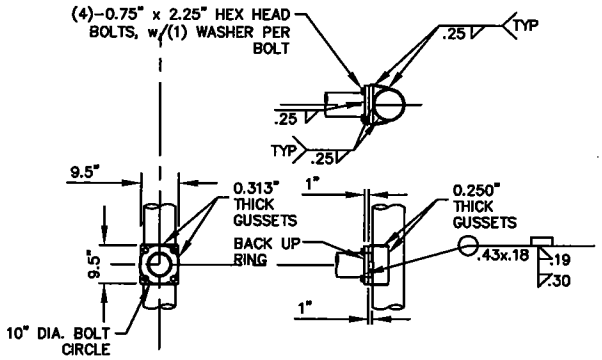

LUMINAIRE ARM CONNECTION

NTS

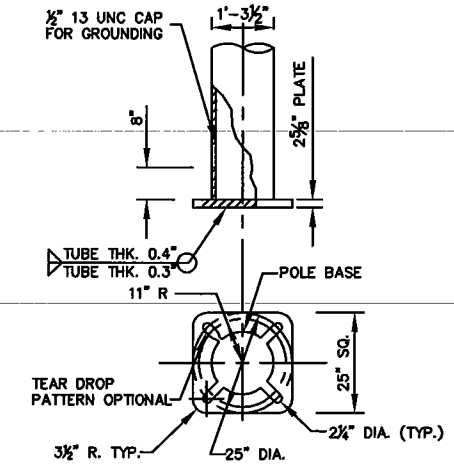

POLE BASE DETAIL

NTS

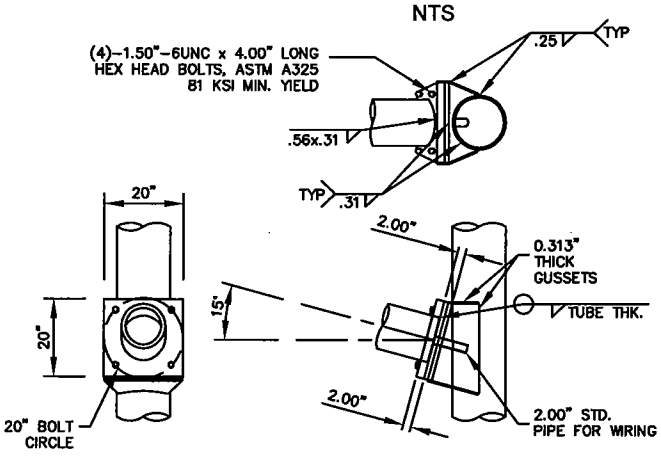

SIGNAL ARM CONNECTION

NTS

NOTES:

1. IT IS THE POLE MANUFACTURER'S RESPONSIBILITY TO ENSURE THAT THEIR EQUIPMENT IS DESIGNED TO ACCOMMODATE THE TOTAL LOAD OF ALL EQUIPMENT DEPICTED ON THE PLAN SET. IT IS ALSO THE RESPONSIBILITY OF THE POLE MANUFACTURER TO CONSTRUCT THE POLE BASE PLATE TO MATCH THE CONFIGURATION OF BOLTS AND FOUNDATION ON SHEET TS08 OF THIS PLAN SET.
2. POLES AND ARMS SHALL MEET THE DESIGN REQUIREMENTS OF AASHTO STANDARD SPECIFICATIONS FOR STRUCTURAL SUPPORTS FOR HIGHWAY SIGNS, LUMINAIRES, AND TRAFFIC SIGNALS (CURRENT EDITION) FOR AN 80 MPH WIND WITH 100 MPH GUSTS.
3. STEEL POLE AND ARMS AND THE STRUCTURAL SECTION PROPERTIES SHALL BE DESIGNED USING A MAXIMUM ALLOWABLE STRENGTH OF 55 KSI. STEEL SHALL HAVE A MINIMUM YIELD STRENGTH OF 48.3 KSI WITH NO CREDIT ALLOWANCE FOR COLD WORKING.
4. ALL STRUCTURAL STEEL SHALL BE HOT DIP GALVANIZED AFTER FABRICATION IN ACCORDANCE WITH ASTM A 123.
5. TUBE DIAMETERS TOLERANCE OF ± 0.125'.
6. ALL GALVANIZED STEEL THREADS SHALL BE FREE FROM DEFECTS ALLOWING NUTS TO BE FREE RUNNING BY HAND FOR THE ENTIRE LENGTH OF THE THREADS.
7. WELDING DESIGN AND FABRICATION SHALL BE IN ACCORDANCE WITH CURRENT AMERICAN WELDING SOCIETY (AWS) SPECIFICATION D1.1 ALL WELDING, REGARDLESS OF WHERE IT IS DONE (SHOP OR FIELD) OR WHAT COMPONENTS ARE WELDED (REBAR, STEEL, OR OTHER METALS), MUST BE DONE BY AN AWS CERTIFIED WELDER. THIS INCLUDES TEMPORARY STEEL STRUCTURES SUCH AS FALSEWORK AND UNDERGROUND SHORING. CONTRACTORS MUST SUBMIT COPIES OF CURRENT AWS CERTIFICATION TO THE CITY ENGINEER BEFORE ANY FIELD WELDING BEGINS.
8. DUAL MAST ARM POLE ASSEMBLY, ARMS SHALL BE AT 90 DEGREES.
9. ALL INSULATORS SHALL BE BANDED.
10. POLES AND ARMS SHALL BE CIRCULAR CROSS SECTIONS.
11. SHOP DRAWINGS ARE REQUIRED TO BE SUBMITTED TO THE CITY OF PEORIA FOR REVIEW PRIOR TO THE ORDERING OF ANY EQUIPMENT.
12. ALL BUTT OR GROOVE WELDS SHALL BE GROUND FLUSH.
13. UNLOADED - NO DEAD OR LIVE LOAD.

01/14/2008

I:\Guide\Details\CAD\ PE-038-2

CITY OF PEORIA
STANDARD DETAIL PE-090
SIGHT DISTANCE REQUIREMENTS FOR ARTERIAL AND COLLECTOR STREETS

APPROVALS: David J. Moody 2/22/07
CITY ENGINEER DATE

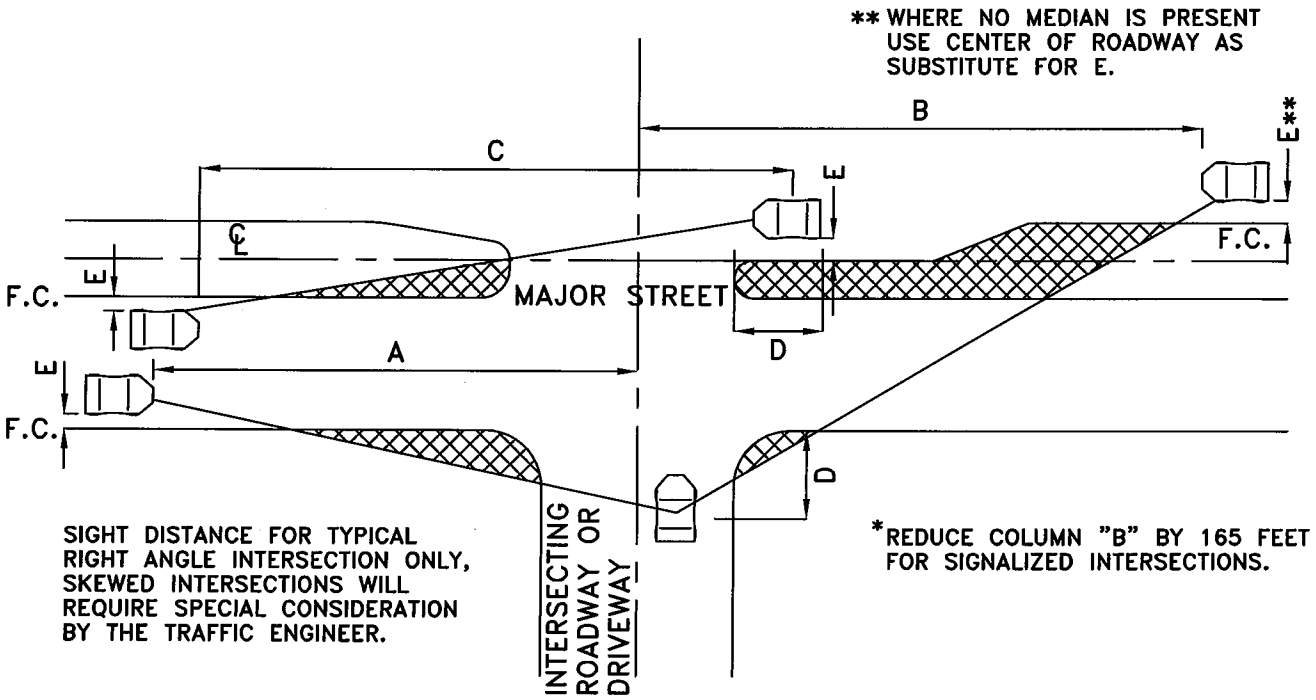

TABLE

STREET	A	*B	C	D	E
COLLECTOR	455'	455'	490'	16'	3'
ARTERIAL	585'	585'	630'	16'	3'

NOTES

1. NO SIGNS, FENCES, WALLS, UTILITY BOXES, STRUCTURES, SHRUBS, HEDGES, OR OTHER PLANTS, (EXCLUDING TREES) OVER 30 INCHES IN HEIGHT SHALL BE PERMITTED WITHIN THE RESTRICTED AREAS, EXCEPT AS APPROVED BY THE CITY TRAFFIC ENGINEER.

2. TREES ARE PERMITTED WITHIN THE RESTRICTED AREAS PROVIDED:
   A. NO LIMBS, LEAVES, NEEDLES OR OTHER FOLIAGE ABOVE 30 INCHES OR BELOW 84 INCHES ARE PERMITTED.
   B. TREES ARE PLANTED SO AS NOT TO OBSTRUCT 20% OF THE VISIBILITY WHEN COMBINED WITH OTHER OBSTRUCTIONS PRESENT.

I:\GUIDE\DETAILS\CAD\PE-090

01/22/2007

CITY OF PEORIA
STANDARD DETAIL PE-091
UNOBSTRUCTED VIEW EASEMENT REQUIREMENTS FOR STREETS

APPROVALS: David Mead 2/22/07
CITY ENGINEER DATE

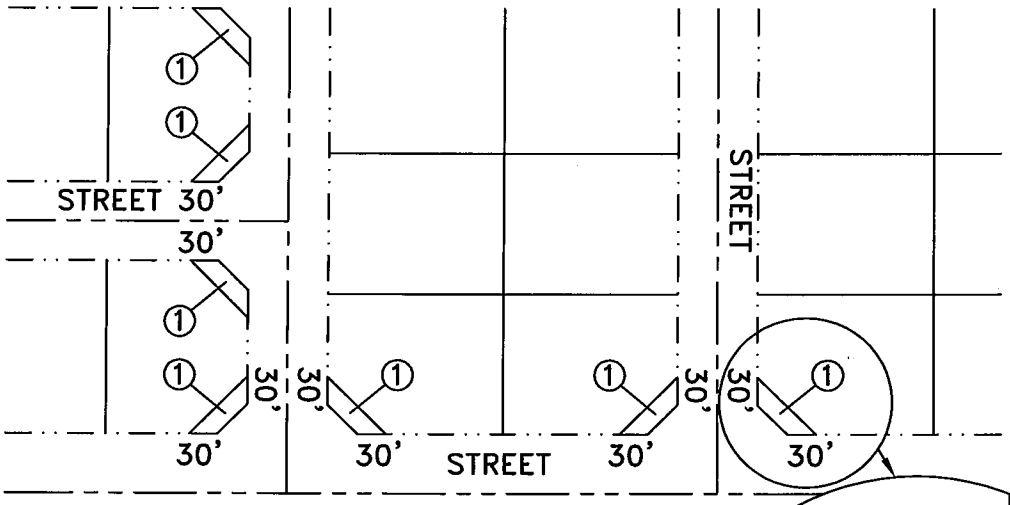

① UNOBSTRUCTED VIEW EASEMENT AREA.

PLAN VIEW

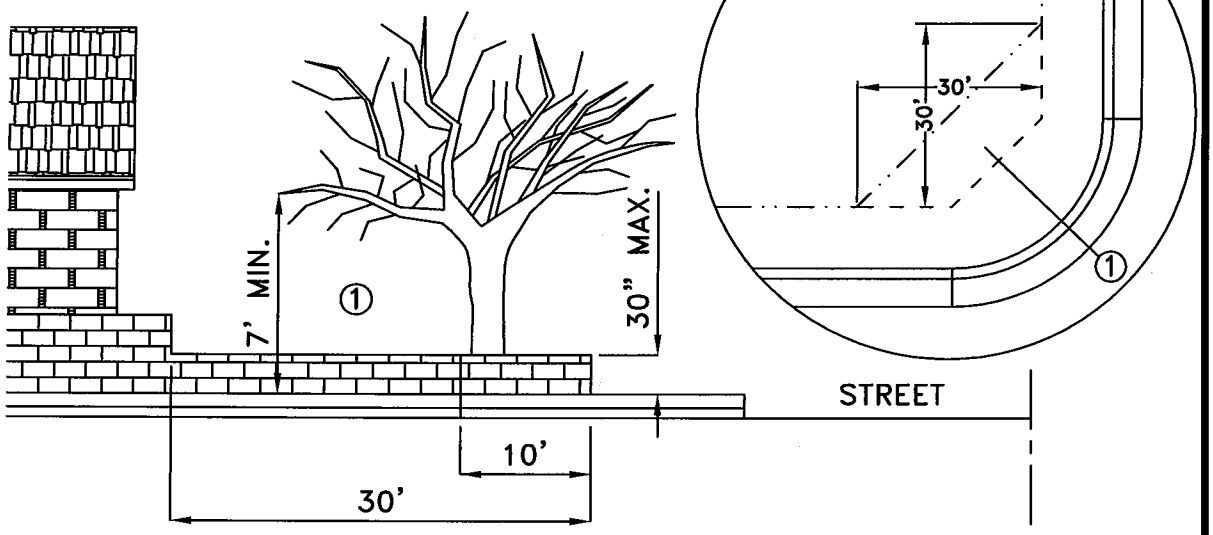

1. SIGNS, FENCES, WALLS, UTILITY BOXES, STRUCTURES, SHRUBS, HEDGES OR OTHER PLANTS, BUT EXCLUDING TREES OVER 30 INCHES IN HEIGHT SHALL NOT BE PERMITTED WITHIN THE RESTRICTED AREAS EXCEPT AS APPROVED BY CITY TRAFFIC ENGINEER.

2. TREES ARE PERMITTED WITHIN THE RESTRICTED AREAS PROVIDED:
   A. NO LIMBS, LEAVES, NEEDLES OR OTHER FOLIAGE ABOVE 30 INCHES OR BELOW 84 INCHES ARE PERMITTED.
   B. TREES ARE PLANTED SO AS NOT TO OBSTRUCT MORE THAN 20% OF THE VISIBILITY WHEN COMBINED WITH OTHER OBSTRUCTIONS PRESENT.

I:\GUIDE\DETAILS\CAD\PE-091

01/22/2007

CITY OF PEORIA
STANDARD DETAIL PE-100
MINIMUM REQUIREMENTS FOR GATED ENTRANCES TO RESIDENTIAL SUBDIVISIONS

APPROVALS:

CITY ENGINEER — DATE 2/14/08

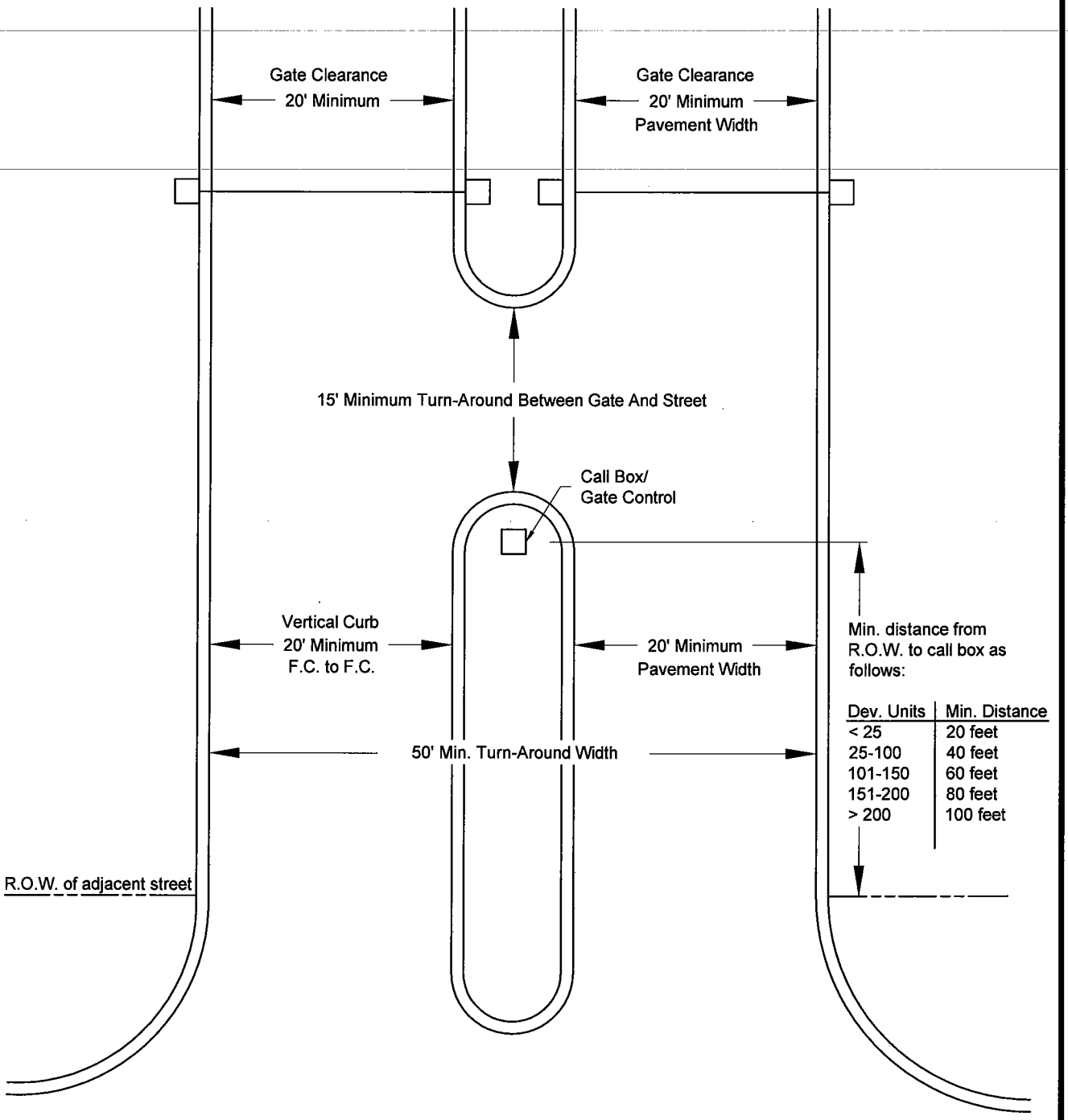

Dev. Units	Min. Distance
< 25	20 feet
25-100	40 feet
101-150	60 feet
151-200	80 feet
> 200	100 feet

I:\GUIDE\DETAILS\CAD\PE-100

01/24/2008

CITY OF PEORIA
STANDARD DETAIL PE-102
CITY FACILITY SERVICE/ACCESS GATE

APPROVALS: _____ 3/14/08 _____ 2/12/08

CITY ENGINEER — DATE — UTILITIES DIRECTOR — DATE

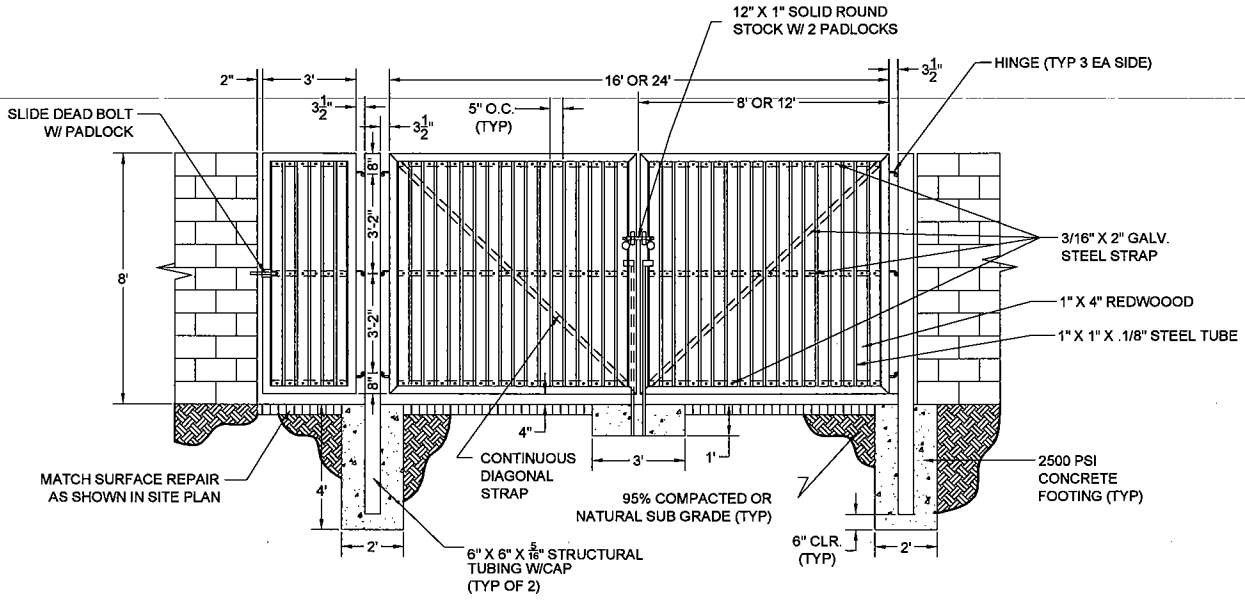

NOTES:

1. FRAME OF GATES AND DOOR TO BE CONSTRUCTED FROM 3" X 3" X ¼" STRUCTURAL TUBING WITH WELDED MITRE JOINTS (TOP, BOTTOM, AND SIDE JOINTS)
2. DIAGONAL STRAP TO BE WELDED ON BOTH SIDES OF EACH INTERSECTION WITH HORIZONTAL STRAPS.
3. BLOCK AT DOOR OPENING TO BE COVERED WITH ¼" GALV. FACE PLATE ATTACHED WITH ½" ANCHOR BOLT @ 12" O.C.
4. REDWOOD SLATS TO BE ATTACHED BY ⅜" X 2" CARRAGE BOLTS, NUT, AND WASHER. NUTS ON INSIDE OF ENCLOSURE. (TYP 3 EACH SLAT).

I:\GUIDE\DETAILS\CAD\PE-102

01/24/2008

CITY OF PEORIA
STANDARD DETAIL PE-101
ALLOWABLE MATERIALS LIST

APPROVALS:

CITY ENGINEER — DATE 3/10/08

UTILITIES DIRECTOR — DATE

Materials allowed for construction in Peoria shall be per Maricopa Association of Governments, Uniform Specifications and Details for Public Works Construction except as provided below.

Water Line Materials:

a. Ductile Iron Pipe, pressure class 350, is acceptable for water lines sizes eight (8) inches and twelve (12) inches in diameter.
b. Ductile Iron Pipe, pressure class 250 minimum, is acceptable for water lines sixteen (16) inches in diameter and larger.
C. Polywrap for Ductile Iron Pipe shall be in conformance with Section 610.6 of the MAG Standard Specifications.

Fire Hydrants: The only allowable makes, models and manufacturers are: AVK, Clow, Jones, Mueller, and American Flow Control (Wet Barrel Only)

Valves: Shall be resilient seated, solid wedge gate valves meeting AWWA standards and shall open by turning left.

Sewer Line Materials:

a. Vitrified Clay Pipe which conforms with Section 743 of the MAG Standard Specifications is acceptable for sewer line sizes eight (8) inches through fifteen (15) inches in diameter.
b. PVC SDR 35 Sewer Pipe which conforms with Section 745 of the MAG Standard Specifications is acceptable for sewer line sizes eight (8) inches through fifteen (15) inches in diameter.
c. Sewer service piping shall be SCH-40 PVC.
d. Ductile Iron with approved lining.

Storm Drain and Irrigation Line Pipe Materials:

a. Materials used within the right-of-way shall be Rubber Gasketted Reinforced Concrete Pipe (RGRCP) per ASTM C76.
b. The rating shall be provided by the Design Engineer. The minimum rating shall be Class IV.

CITY OF PEORIA
STANDARD DETAIL PE-110
WB50 TURNAROUND

APPROVALS:

CITY ENGINEER — DATE 9/22/07

FIRE CHIEF — DATE 8-20-07

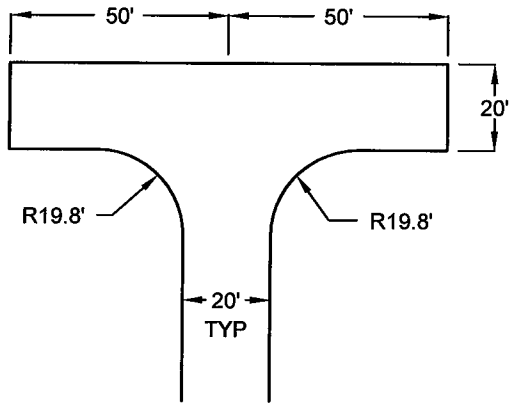

100'
HAMMERHEAD

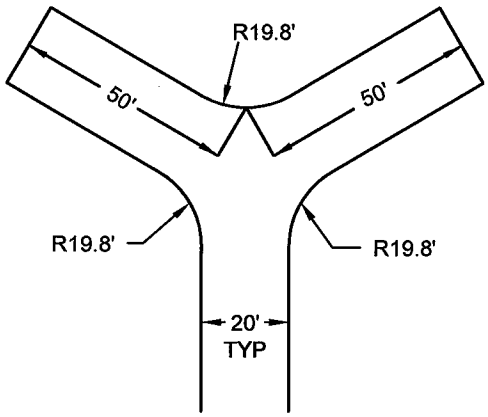

ACCEPTABLE ALTERNATE
TO 100' HAMMERHEAD

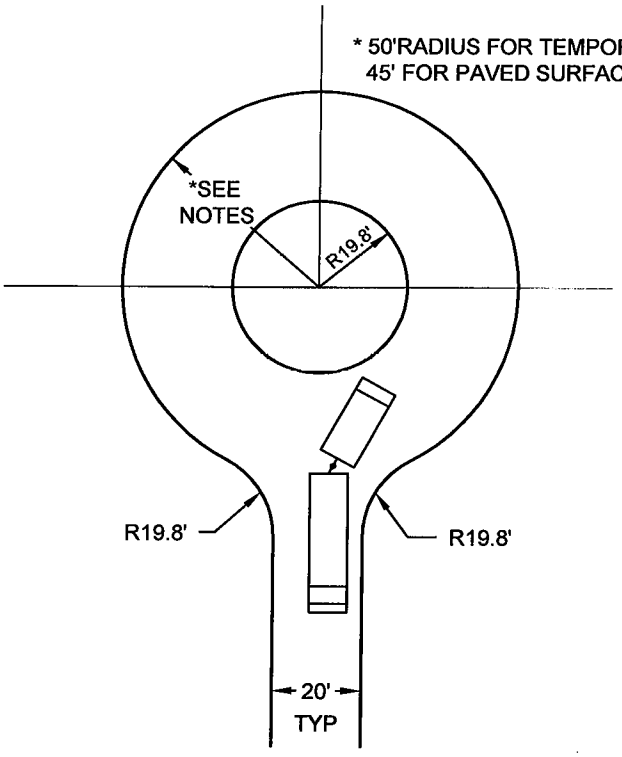

90'
CUL-DE-SAC

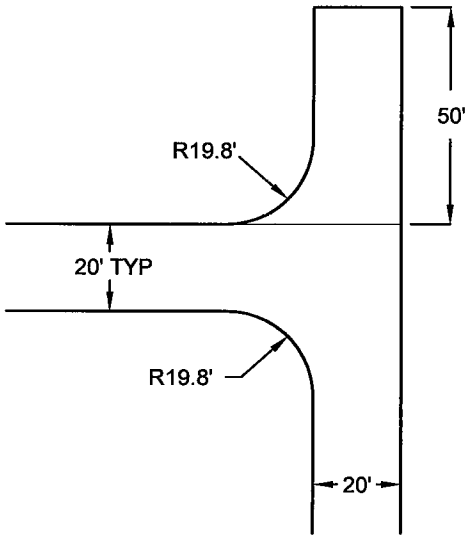

ACCEPTABLE ALTERNATE
TO 100' HAMMERHEAD

I:\GUIDE\DETAILS\CAD\PE-110

08/20/2007

CITY OF PEORIA
STANDARD DETAIL PE-119
HANDRAIL DETAIL

APPROVALS: David Mraz 2/22/07
CITY ENGINEER DATE

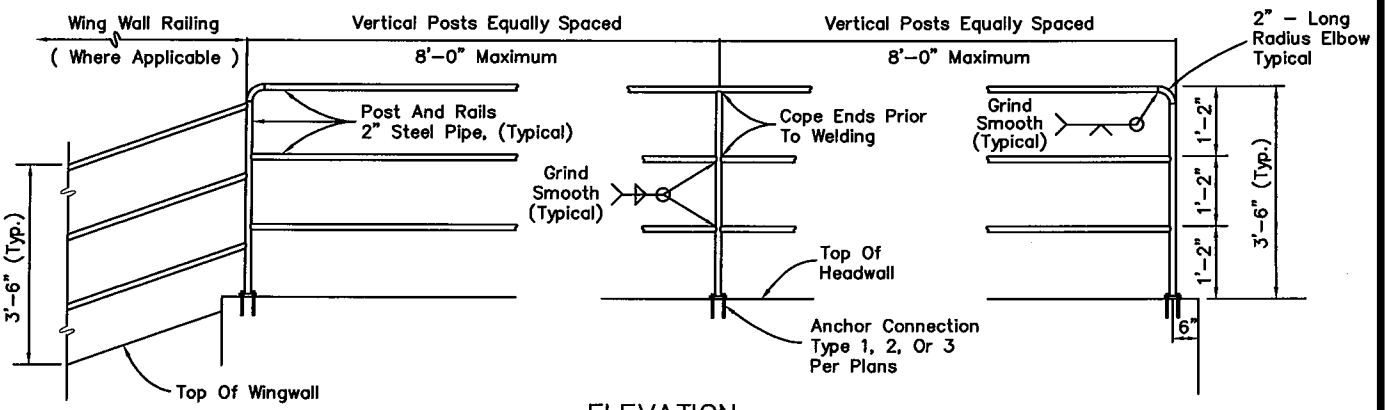

ELEVATION

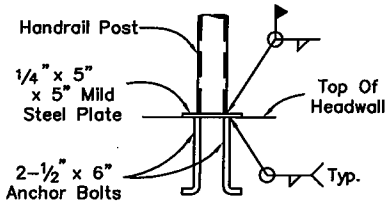

TYPE 1
ANCHOR PLATE DETAIL

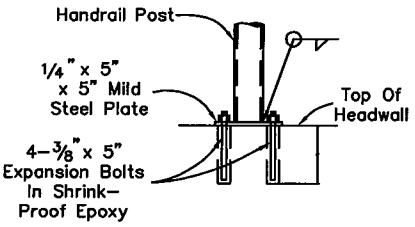

TYPE 2
EXPANSION BOLT DETAIL

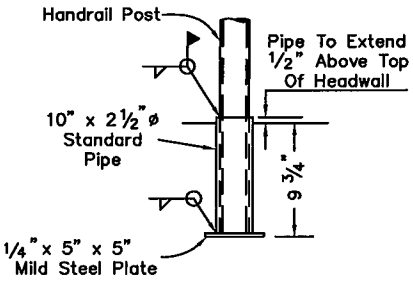

TYPE 3
PIPE SLEEVE DETAIL

CONSTRUCTION NOTES

1. Paint handrail per MAG Specifications Section 530. Color to be determined by the City of Peoria.
2. Vertical posts to be evenly spaced.
3. To be installed as needed.

I:\GUIDE\DETAILS\CAD\PE-119

01/22/2007

CITY OF PEORIA
STANDARD DETAIL PE-121-1
MASONRY RETAINING WALL

APPROVALS: David Moss 2/22/07
CITY ENGINEER DATE

Design Assumptions:

1. Soil bearing value used in design is 1000 psf. Equivalent Fluid Pressure: 35 psf. If site conditions do not meet min criteria, Please contact City Engineering Department.
2. Bottom of footing 32" below natural grade.
3. Concrete to conform to MAG Class B, 2500 psi at 28 days.
4. All Concrete Blocks shall be Grade A, medium weight units conforming to ASTM C-90.
5. Reinforcing steel shall be ASTM A615, Grade 60.
6. Minimum Lap for all reinforcing shall be 30 bar diameters or 18", whichever is greater.
7. All Cells shall be filled solid with at least type S grout.
8. All Horizontal bars shall be in channel or lintel blocks.
9. Compaction of Backfill shall not be less than 95% and shall conform to MAG standard 211.
10. Provide 2" diameter drains at 4' 0" with cont. gravel pockets.
11. Refer to City of Peoria STD. General Notes & Grading Drainage Notes.

CITY OF PEORIA
STANDARD DETAIL PE-121-2
MASONRY RETAINING WALL

APPROVALS: _____ 2/22/07
CITY ENGINEER DATE

Backfill Slope	Retained Height H	Ftg. Width W	Wall Thickness T1	Wall Thickness T2	Reinforcing Bar					
					A Bar	B Bar	C Bar	D Bar	E Bar	F Bar
0:1	0' - 3' 0"	3' 0"	8	-	#5 @ 32"	-	3 - #4	2 - #4	-	-
	3' 1" - 4' 0"	3' 6"	8	-	#5 @ 32"	-	3 - #4	3 - #4	-	-
	4' 1" - 5' 0"	4' 0"	8	-	#7 @ 16"	-	4 - #4	3 - #4	-	-
	5' 1" - 6' 0"	5' 0"	12	8	#5 @ 24"	#5 @ 24"	4 - #4	4 - #4	-	-
	6' 1" - 7' 0"	6' 0"	12	8	#6 @ 16"	#5 @ 32"	5 - #4	4 - #4	#6 @ 16"	-
	7' 0" - 8' 0"	7' 0"	12	8	#9 @ 16"	#5 @ 32"	6 - #4	5 - #4	#5 @ 16"	#5 @ 16"
2:1	0' - 3' 0"	3' 0"	8	-	#5 @ 32"	-	3 - #4	2 - #4	-	-
	3' 1" - 4' 0"	4' 0"	8	-	#5 @ 32"	-	4 - #4	3 - #4	-	-
	4' 1" - 5' 0"	5' 0"	8	-	#7 @ 16"	-	4 - #4	4 - #4	-	-
	5' 1" - 6' 0"	5' 6"	12	8	#5 @ 24"	#5 @ 24"	4 - #4	4 - #4	#5 @ 12"	-
	6' 1" - 7' 0"	6' 6"	12	8	#6 @ 16"	#5 @ 32"	5 - #4	5 - #4	#5 @ 16"	#5 @ 16"
	7' 0" - 8' 0"	10' 6"	12	8	#9 @ 16"	#5 @ 32"	6 - #4	6 - #4	#6 @ 16"	#6 @ 16"

I:\GUIDE\DETAILS\CAD\PE-121-2

01/22/2007

CITY OF PEORIA
STANDARD DETAIL PE-121-3
MASONRY RETAINING WALL

APPROVALS: David J Mucci 2/22/07
CITY ENGINEER DATE

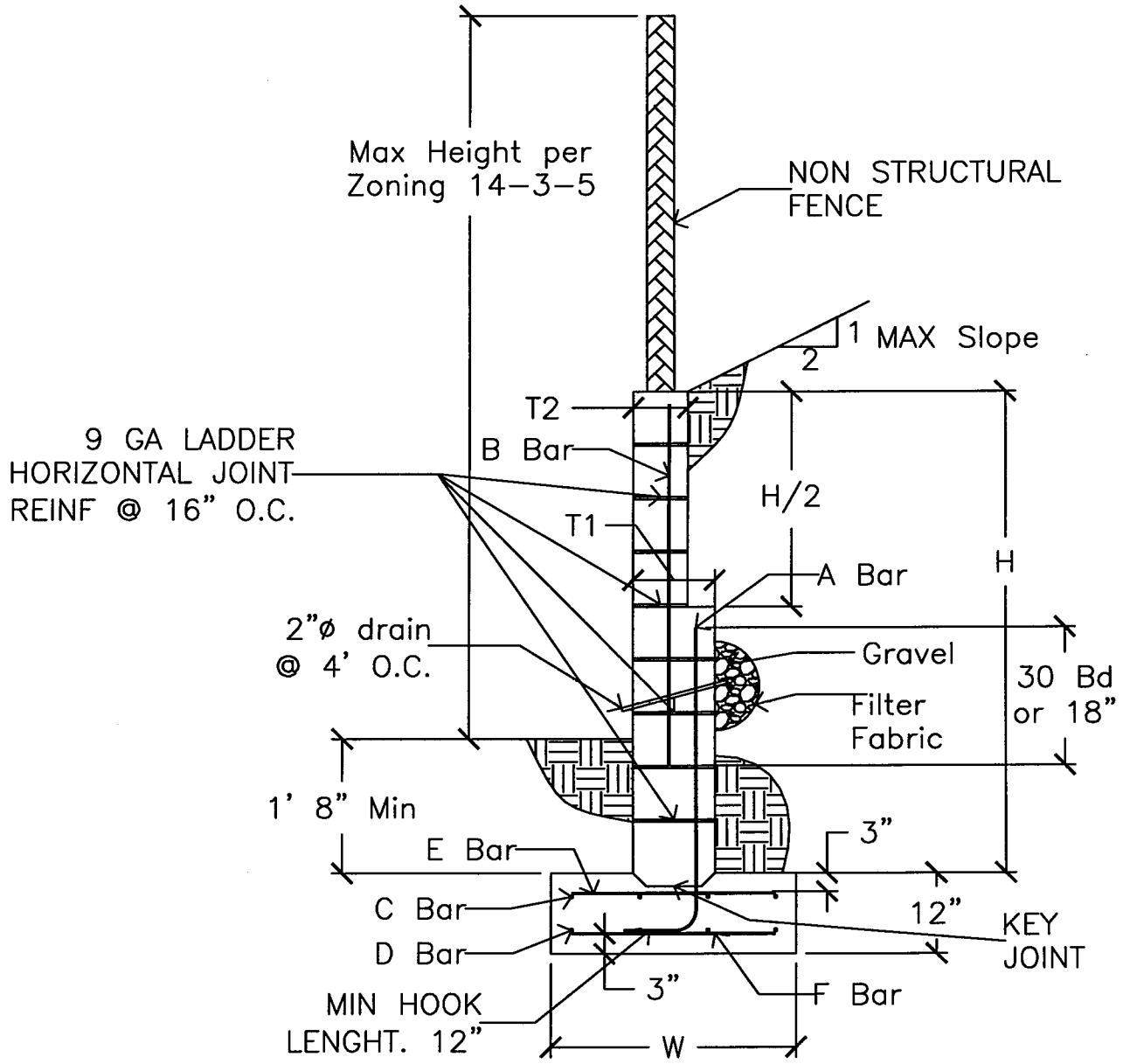

I:\GUIDE\DETAILS\CAD\PE-121-3

01/22/2007

CITY OF PEORIA
STANDARD DETAIL PE-146-1
SOLID WASTE VEHICLE ACCESS

APPROVALS: _____ 2/22/07 _____ 02-26-2007

CITY ENGINEER — DATE — PUBLIC WORKS DIRECTOR — DATE

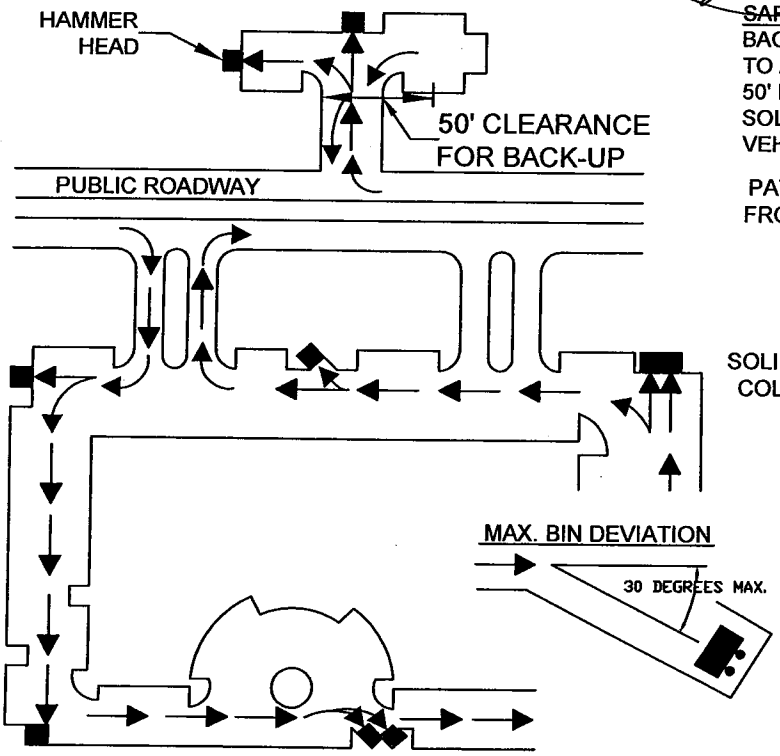

SAFETY NOTE:
BACKING UP MORE THAN 50' AFTER SERVICE TO A SOLID WASTE BIN IS PROBIBITED. THE 50' IS MEASURED FROM THE BACK OF THE SOLID WASTE COLLECTION VEHICLE. THE VEHICLE IS APPROX. 30' LONG.

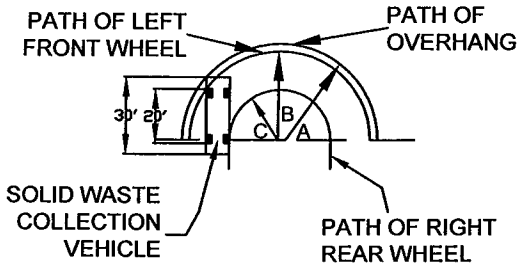

CLEARANCE REQUIREMENTS:
A- 43.9' MIN. TURNING RADIUS
B- 42' TURNING RADIUS
C- 28.4' TURNING RADIUS

PLEASE NOTE:
SOLID WASTE VEHICLES WEIGH APPROX. 20 TONS WHEN FULL. DRIVEWAYS MUST BE BUILT TO SUPPORT THIS WEIGHT WITHOUT DAMAGE TO DRIVE.

NOTES:

1. ALL CURBS ARE TO BE ALIGHNED ON THE OUTSIDE OF ENCLOSURE WALLS. THE CURBS SHALL NOT INTERFERE WITH THE ROUTE OF THE SOLID WASTE COLLECTION VEHICLE.

2. IN GENERAL TERMS, ALL SOLID WASTE COLLECTION ROUTES SHALL MEET ENGINEERING DESIGN CRITERIA (STREET WIDTHS, TURNING RADII) IN A MANNER THAT ALLOWS SOLID WASTE COLLECTION VEHICLES ACCESS TO BIN ENCLOSURES SITES SHALL BE DESIGNED SO COLLECTION VEHICLES CAN SAFELY ACCESS AND LIFT A BIN WITHOUT OBSTRUCTIONS (GROUND LEVEL AND AERIAL OBSTRUCTIONS).

3. FOR THE SAFETY OF OTHERS, SOLID WASTE COLLECTION VEHICLES WILL NOT BACK UP MORE THAN 50 FEET AFTER SERVICING A BIN.

4. NO AWNINGS OR BUILDING PROJECTIONS ALLOWED IN SOLID WASTE COLLECTION VEHICLE ROUTES. MIN. OVERHEAD CLEARANCE OF 14' IS REQUIRED IN DRIVE AND 25' OVER BIN ENCLOSURE AREA FROM STEEL SAFETY POSTS BACK 50'.

5. ROUTES SHALL BE CLEAR OF ALL OBSTRUCTIONS (CURBS, WALLS, OVERHEAD WIRES, AND AWNINGS) TO PREVENT DAMAGE FROM THE COLLECTION VEHICLE.

6. TAKE NOTE OF THE SOLID WASTE COLLECTION ROUTE. THE COLLECTION VEHICLE SHALL TRAVEL THROUGH A SITE ONCE WITHOUT BACKTRACKING.

7. BIN ENCLOSURES ARE TO BE ANGLED NO MORE THAN 30 DEGREES FROM THE CENTER LINE OF THE SOLID WASTE COLLECTION VEHICLE ROUTE.

8. BIN ENCLOSURES SHALL BE LOCATED AWAY FROM ENTRANCED AND EXITS SO SOLID WASTE COLLECTION VEHICLE DOES NOT CREATE A SAFETY HAZARD BY BLOCKING IN-COMING OR OUT-GOING TRAFFIC.

9 STANDARDS FOR SINGLE, DOUBLE, AND TRIPLE-WIDE BIN ENCLOSURES ARE ADDRESSED IN PE-146-2 AND PE-146-3.

10. STANDARDS FOR BIN ENCLOSURE SCREEN WALLS, SAFETY POSTS, AND GATES ARE ADDRESSED IN PE-146-4.

CITY OF PEORIA
STANDARD DETAIL PE-146-2A
SINGLE AND DOUBLE-WIDE BIN ENCLOSURES

APPROVALS:

CITY ENGINEER — DATE — PUBLIC WORKS DIRECTOR — DATE

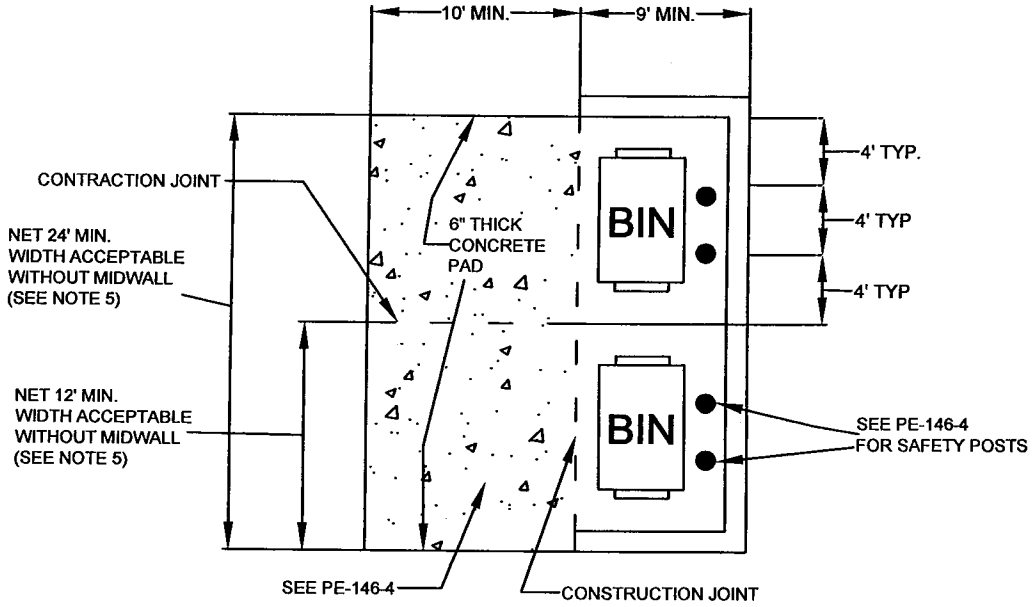

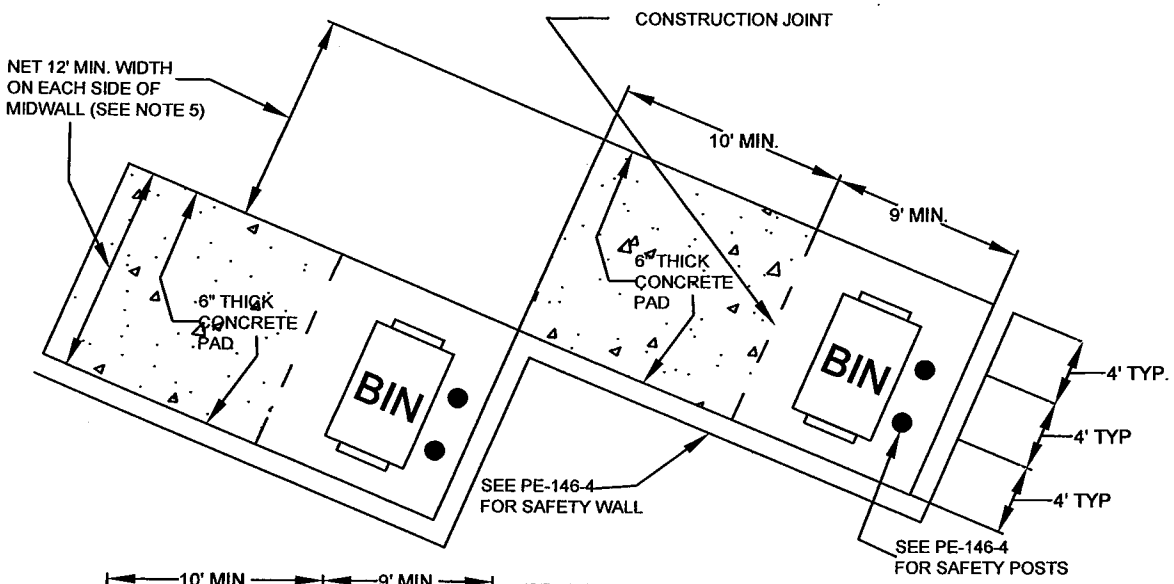

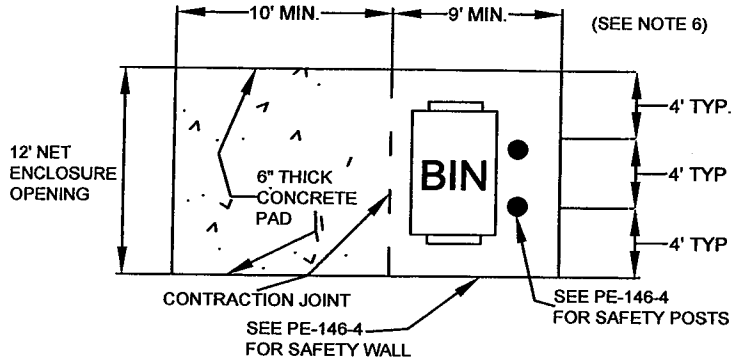

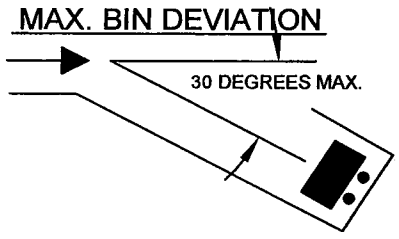

I:\GUIDE\DETAILS\CAD\PE-146-2A

01/23/2007

CITY OF PEORIA
STANDARD DETAIL PE-146-2B
SINGLE AND DOUBLE-WIDE BIN ENCLOSURES NOTES

APPROVALS:

CITY ENGINEER — DATE 3/11/08

PUBLIC WORKS DIRECTOR — DATE 03-07-2008

NOTES

1. All commercial properties shall be designed with enclosures to accomodate (1) refuse enclosure for every 20,000 square feet of building space. Restaurants which are designed on a single pad shall have a minimum (1) refuse. The enclosures can be set up as doubles or singles to maximize the use of the property.
2. Multi-unit residential developments shall be designed with either single or double-wide enclosures for trash.
3. Compactors can be used in developments where the employees load and activate the compacting equipment. Developments that allow customers or residents access to the compacting equipment will not be approved. Maricopa county regulations require twice per week collection if food waste is placed into containers.
4. The number of bin enclosures needed depends on the size of the development. Typically, total volume needs can be calculated based on the half-cubic yard per living unit per week. For example, a development with 240 units x .5 yards = 120 yards per week or 10 trash bins (6 yard) serviced two times per week (10 x 6 x 2 = 120 yards).
5. Single-wide bin enclosures shall have a net enclosure opening of 12 feet.
6. Double-wide bin enclosures shall have a net enclosure opening of 24 feet without midwalls. Although not prefered, double wide bin enclosures can be designed with midwalls with a net enclosure opening of 12 feet on each side of midwall.
7. Gates, hinges & mounting hardware shall be installed so there is a minimum 9 foot depth created within each enclosure.
8. Gates, hinges & mounting hardware shall not intrude upon minimum net enclosure opening.
9. Bin enclosures are to be angled no more than 30 degrees from the center line of the solid wast collection vehicle route.
10. All enclosures shall have gates that screen the bins from public view.
11. Bin enclosures to be a minimum of 3 feet from any non-combustible planned or existing structure at its closest point; 5 feet from any combustible planned or existing structure at its closest point.
12. Standards for solid waste vehicle access are addressed in PE-146-1.
13. Standards for triple wide enclosures are addressed in PE-146-3.
14. Standards for bin enclosure screen walls, safety posts, and gates are addressed in PE-146-4.
15. Restaurants must provide a separate enclosed area to accomodate their grease trap. This designated area must not interfere with the trash/recycling collection.
16. Additional items such as landscaping control boxes and lighting may be positioned on the outside of the enclosure walls.
17. A connection to the water system (installation of hose bib) shall not be allowed to facilitate cleaning of the enclosure.
18. A connection to the sewer system (installation of grate/drain) shall not be allowed to facilitate the wash down and cleaning of the enclosure.

I:\GUIDE\DETAILS\CAD\PE-146-2B

01/29/2008

CITY OF PEORIA
STANDARD DETAIL PE-146-3
TRIPLE-WIDE BIN ENCLOSURES

APPROVALS:

CITY ENGINEER	DATE	PUBLIC WORKS DIRECTOR	DATE
	2/22/07		02-26-2007

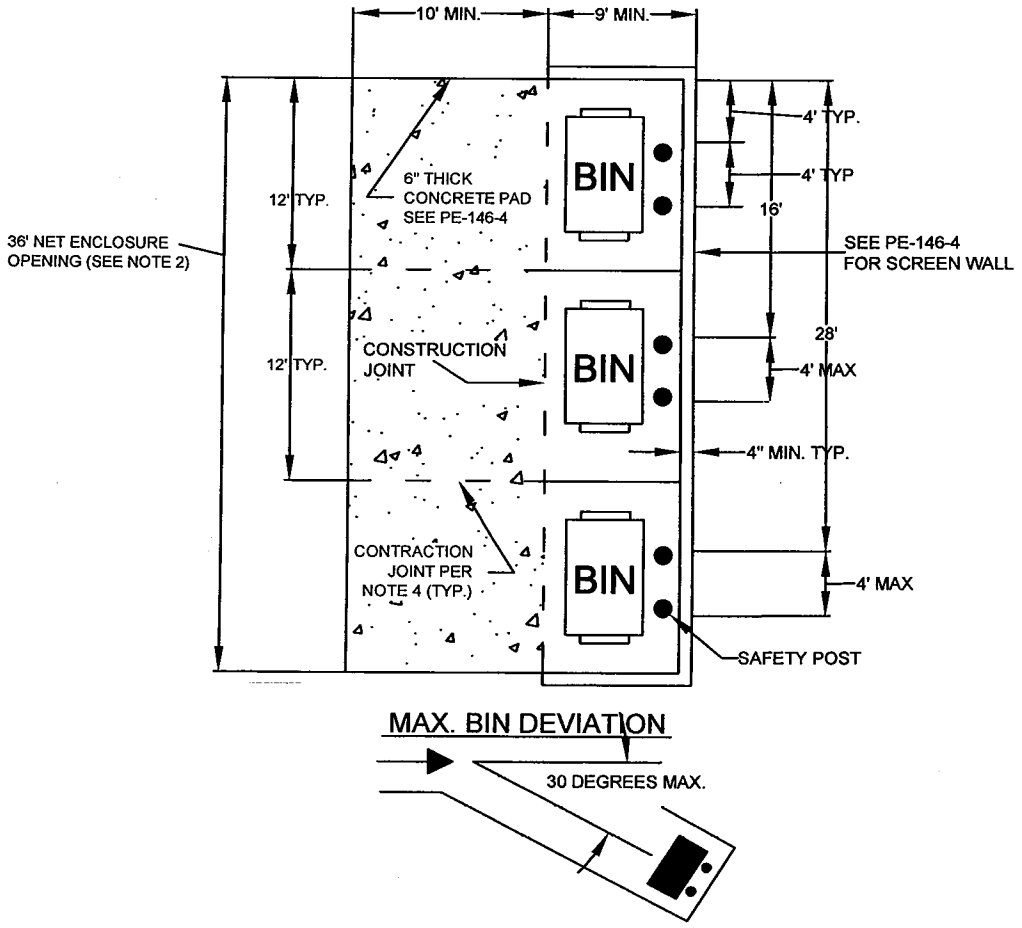

Notes

1. Triple-wide enclosures shall have a net enclosure opening of 36 feet and shall be designed without midwalls, gates hinges, and mounting hardware shall not intrude upon minimum net enclosure opening.

2. Gates, hinges, and mounting hardware shall be installed so there is a minimum 9 foot depth created within each enclosure.

3. Bin enclosures are to be angled no more than 30 degrees from the center line of the solid waste collection vehicle route.

4. Contraction joints may be either scored or sawcut 1-inch deep.

I:\GUIDE\DETAIL\CAD\PE-146-3

02/05/2007

CITY OF PEORIA
STANDARD DETAIL PE-146-4
BIN ENCLOSURE SCREEN WALL, SAFETY POST & GATE STANDARDS

APPROVALS:

CITY ENGINEER — DATE 2/21/07

PUBLIC WORKS DIRECTOR — DATE 02-26-2007

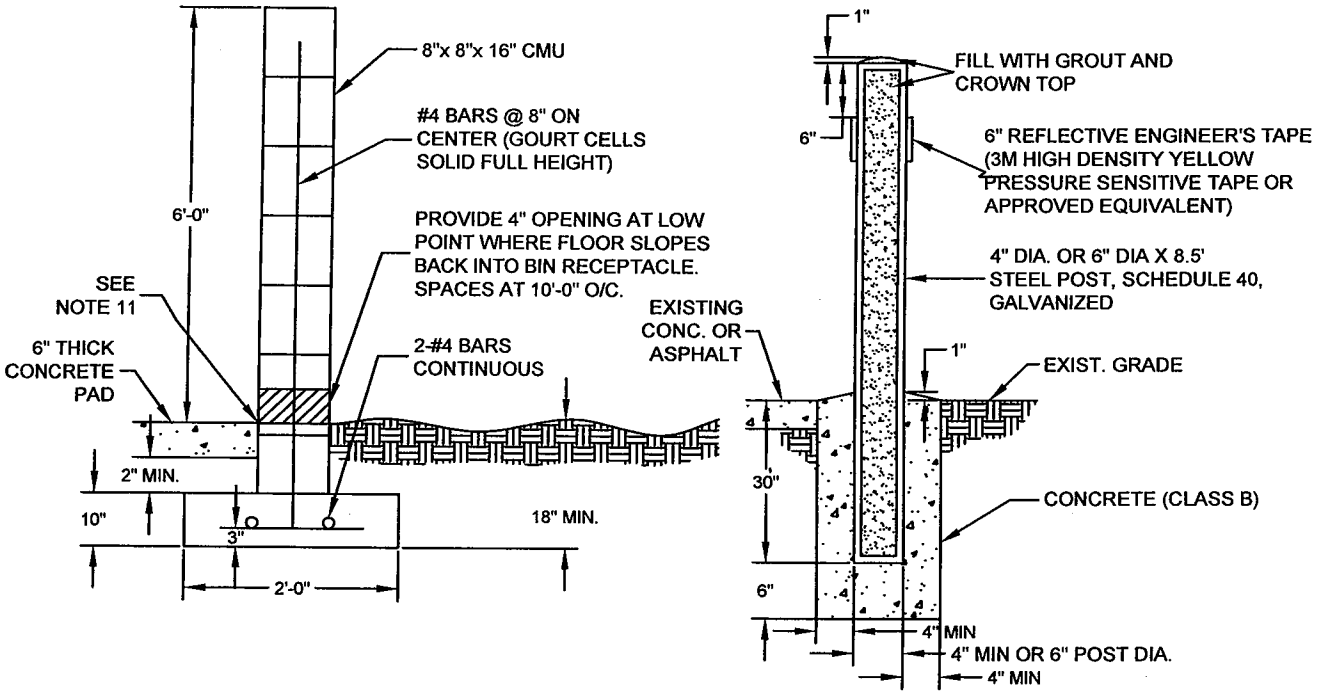

NOTES

1. TRASH AND RECYCLING BIN AREA SHALL BE SCREENED WITH A SIX FOOD (6') MASONRY WALL PER DETAIL ON THIS SHEET.

2. BIN ENCLOSURE TO BE A MINIMUM OF 3 FEET FROM ANY PLANNED OR EXISTING STRUCTURE AT ITS CLOSEST POINT.

3. ALL ENCLOSURES SHALL HAVE GATES THAT SCREEN THE BINS FROM PUBLIC VIEW.

4. GATES SHALL BE INSTALLED SO THERE IS A NET BIN ENCLOSURE OPENING OF 12 FEET PER BIN. GATES, HINGES, AND MOUNTING HARDWARE SHALL NOT INTRUDE UPON MINIMUM NET ENCLOSURE OPENING.

5. GATES, HINGES, AND MOUNTING HARDWARE SHALL BE INSTALLED SO THERE IS A MINIMUM 9 FOOT DEPTH CREATED WITHIN EACH ENCLOSURE.

6. EACH ENCLOSURE GATE SHALL HAVE DROP PINS INSTALLED AND HOLES DRILLED IN THE CONCRETE AT BOTH THE OPEN AND CLOSED POSITIONS TO PREVENT GATES FROM CLOSING INTO THE COLLECTION VEHICLE.

7. BIN ENLOSURES SHALL HAVE (2) 4" DIAMETER STEEL SAFETY POSTS INSTALLED IN THE BACK OF THE ENCLOSURE ONLY PER DETAIL ON THIS SHEET.

8. SAFETY POSTS SHALL HAVE A HEIGHT OF 6 FEET OR BE EQUAL TO THE HEIGHT OF THE BACK SCRREN WALL OF THE ENCLOSURE. SAFETY POSTS SHALL BE PLACED A MINIMUM OF 4" FROM THE WALL.

9. USE CLASS "A" CONCRETE EXCEPT AS NOTED IN SAFETY POST DETAIL ON THIS SHEET.

10. STEEL REINFORCEMENT SHALL BE GRADE 40.

11. EXPANSION JOINT FILLER SHALL BE ½" BITUMINOUS TYPE PREFORMED EXPANSION JOINT FILLER ASTM D-1751.

12. EXTERIOR FINISH OF 6 FOOT MASONRY SCREEN WALLS SHALL BE COORDINATED ACHITECTURALLY WITH PRIMARY BUILDING FINSHES.

13. SOIL BELOW THE WALL FOOTER AND CONCRETE PAD SHALL BE COMPACTED TO A DEPTH OF 6 INCHES AND TO A MINIMUM DRY DENSITY OF 90% IN ACCORDANCE WITH ASTM D-2922 AND D-3017, AFTER ADJUSTMENT FOR ROCK CORRECTION.

14. STANDARDS FOR SOLID WASTE VEHICLE ACCESS ARE ADDRESSED IN PE-146-1.

15. STANDARDS FOR SINGLE, DOUBLE, AND TRIPLE-WIDE BIN ENCLOSURES ARE ADDRESSED IN PE-146-2 AND PE-146-3.

I:\GUIDE\DETAILS\CAD\PE-146-4

01/23/2007

CITY OF PEORIA
STANDARD DETAIL PE-210-1
SPEED HUMP

APPROVALS: David Mood 2/27/08
CITY ENGINEER DATE

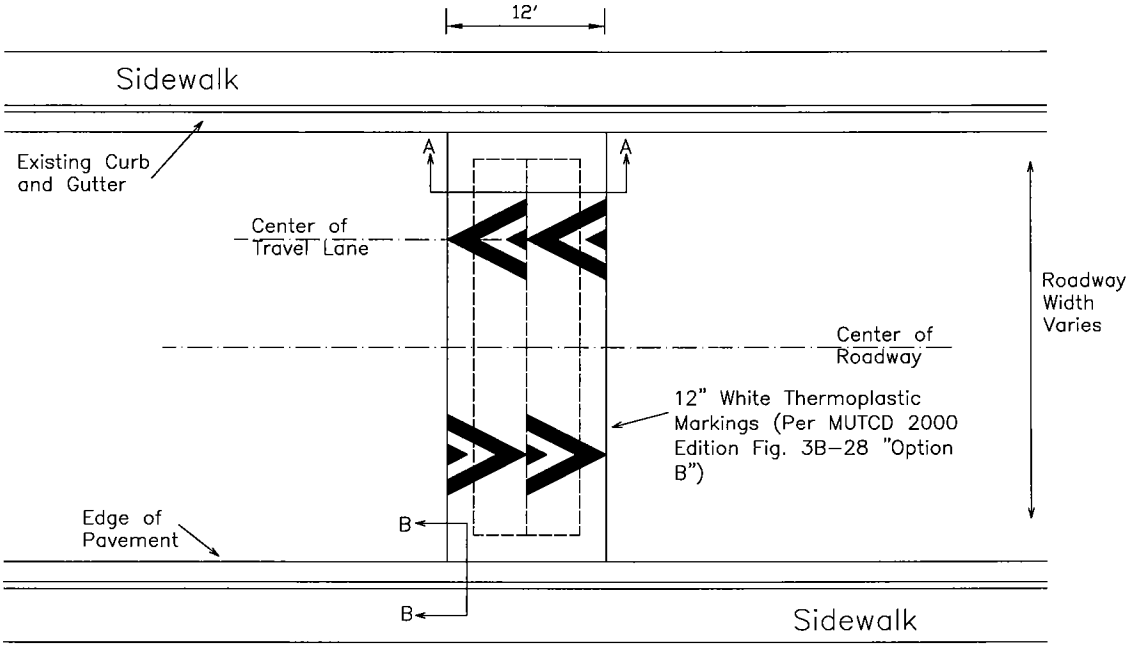

PLAN VIEW

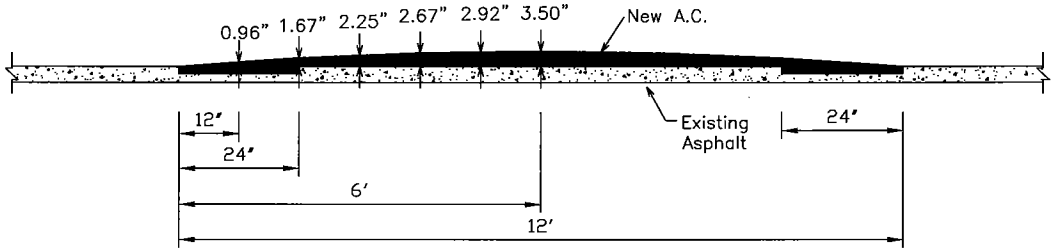

SECTION A-A

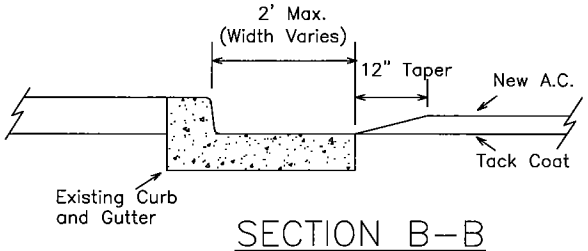

SECTION B-B

Important:
To gain maximum effect, speed humps must be the full 3.5". Speed humps shall be 3.5" high with an allowable maximum tolerance of ± 0.25". Contractors must not exceed this height based on consideration for emergency and fire department vehicles. Because of this concern, any speed humps constructed over 3.75" must be corrected at the contractors expense.

NOTES:
1. Cross section shows approximate elevations for 3.5" speed hump.
2. Speed humps shall not be placed over manholes, water valves, survey monuments, junction chambers, in conflict with driveways, or adjacent to fire hydrants.
3. Speed humps must be placed at locations approved and specified by the Public Works/Engineering Department.
4. Speed humps shall be constructed with an approved D1/2 Coarse hot mix, per City of Peoria standards. A tack coat shall be applied prior to application of pavement.
5. Contractor must provide verification of cross-section dimensions.
6. Contractor must properly compact humps to preclude excessive settlement.
7. The contractor shall provide a two year warranty on labor and material. Contractee should request contractor to warrant height to be at least 3.25" tall after 24 months.
8. Permanent striping shall be Thermoplastic Hot Tape or 3M Sta-Mark Series SMS-5730 or approved equivalent.

I:\GUIDE\DETAILS\CAD\PE-210-1

01/31/2008

CITY OF PEORIA
STANDARD DETAIL PE-210-2
SPEED TABLE

APPROVALS: David Mead 2/27/08
CITY ENGINEER DATE

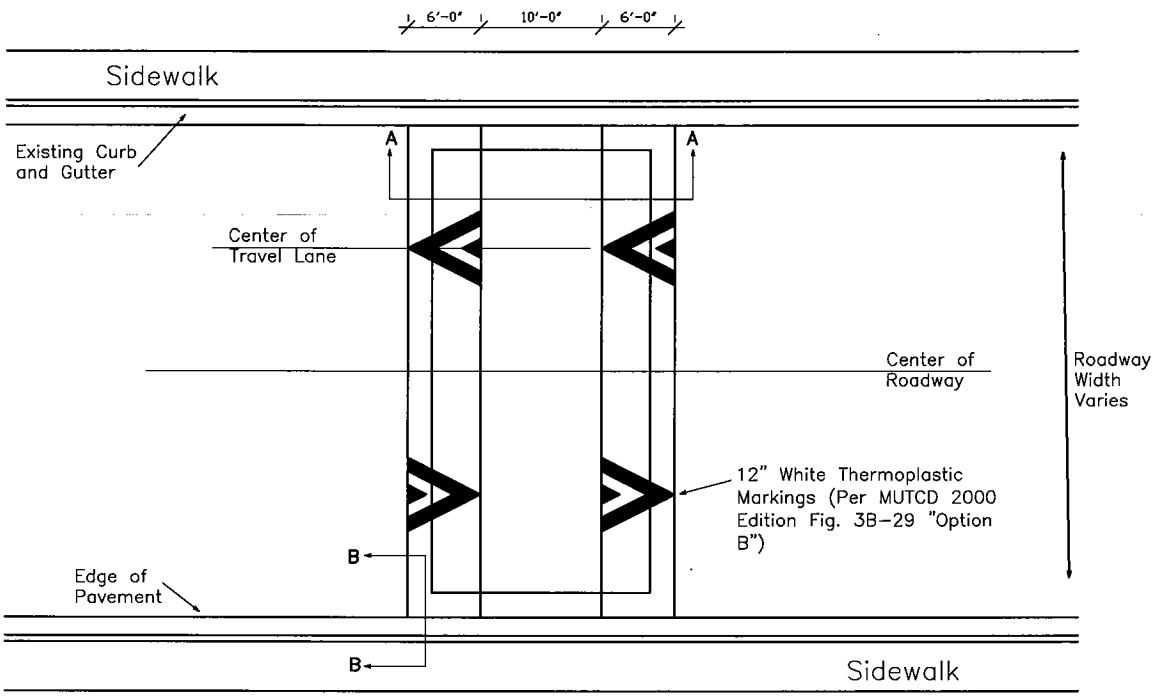

PLAN VIEW

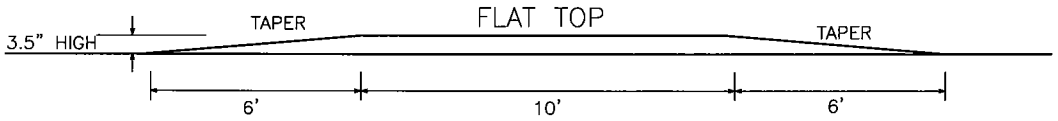

SECTION A-A

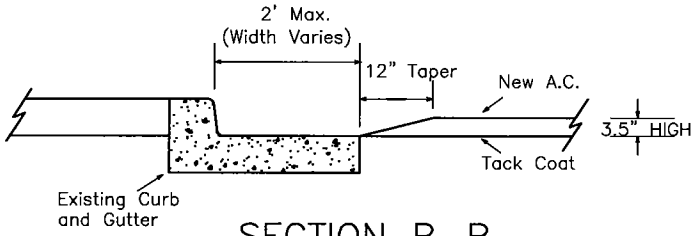

SECTION B-B

Important:
To gain maximum effect, speed tables must be the full 3.5". Speed tables shall be 3.5" high with an allowable maximum tolerance of ± 0.25". Contractors must not exceed this height based on consideration for emergency and fire department vehicles. Because of this concern, any speed tables constructed over 3.75" must be corrected at the contractors expense.

NOTES:
1. Cross section shows approximate elevations for 3.5" speed table.
2. Speed tables shall not be placed over manholes, water valves, survey monuments, junction chambers, in conflict with driveways, or adjacent to fire hydrants.
3. Speed tables must be placed at locations approved and specified by the Public Works/Engineering Department.
4. Speed tables shall be constructed with an approved D1/2 Coarse hot mix, per City of Peoria standards. A tack coat shall be applied prior to application of pavement.
5. Contractor must provide verification of cross-section dimensions.
6. Contractor must properly compact tables to preclude excessive settlement.
7. The contractor shall provide a two year warranty on labor and material. Contractee should request contractor to warrant height to be at least 3.25" tall after 24 months.
8. Permanent striping shall be Thermoplastic Hot Tape or 3M STA-Mark Series SMS-5730 or approved equivalent.

I:\GUIDE\DETAILS\CAD\PE-210-2

01/31/2008

CITY OF PEORIA
STANDARD DETAIL PE-210-3A
SPEED CUSHION

APPROVALS: David J Murray 3/27/08
CITY ENGINEER DATE

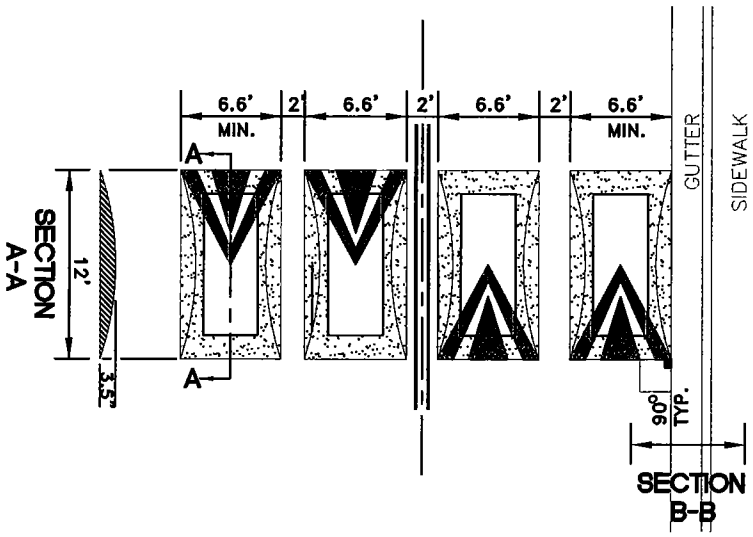

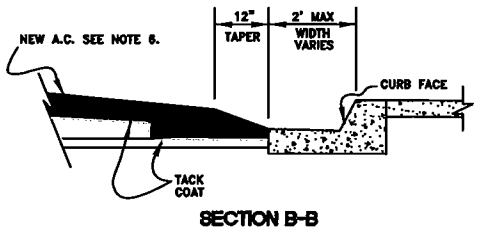

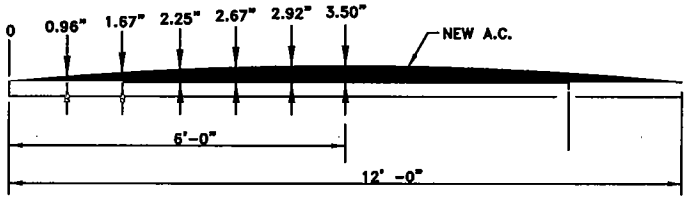

NOTES:

1. DETAILS SHOW APPROXIMATE ELEVATIONS FOR A SPEED CUSHION.
2. SPEED CUSHIONS MUST BE PLACED AT LOCATIONS APPROVED AND SPECIFIED BY THE CITY OF PEORIA ENGINEERING DEPARTMENT.
3. CENTERLINE STRIPE MAY NOT BE IN THE CENTER OF THE ROADWAY, BUT IF NOT STRIPED, POSITION CUSHIONS SYMETRICAL TO CENTER OF ROADWAY.
4. POSITION SPEED CUSHIONS ON STRAIGHT SECTIONS OF ROADWAY.
5. SPEED CUSHIONS SHALL NOT BE PLACED OVER MANHOLES, WATER VALVES, JUCTION CHAMBERS, SURVEY MONUMENTS, ADJACENT TO FIRE HYDRANTS OR IN CONFLICT WITH DRIVEWAYS.
6. CUSHIONS TO BE CONSTRUCTED WITH AN APPROVED D½ COARSE HOT MIX, PER CITY OF PEORIA STANDARD OR MAG ⅜" MIX.
7. A TACK COAT SHALL BE APPLIED PRIOR TO APPLICATION OF ASPHALT.
8. CONTRACTOR SHALL PROVIDE VERIFICATION OF DIMENSIONS.
9. CONTRACTOR SHALL STRIPE THE CUSHIONS AS PER ATTACHED PAVEMENT MARKING DETAIL.

IMPORTANT:
To gain maximum effect, Cushions must be constructed as per the shown details, with an allowable tolerance of + 0.25". Contractors must comply based on consideration for emergency and fire department vehicles. Because of this concern, any deviation from the shown dimensions must be corrected at the contractor's expense. The outer cushions must be extended to the edge of pavement with a minimum width being 6.6'.

I:\GUIDE\DETAILS\CAD\PE-210-3A

03/17/2008

CITY OF PEORIA
STANDARD DETAIL PE-210-3B
22' SPEED CUSHION

APPROVALS: _____ 3/25/08
CITY ENGINEER DATE

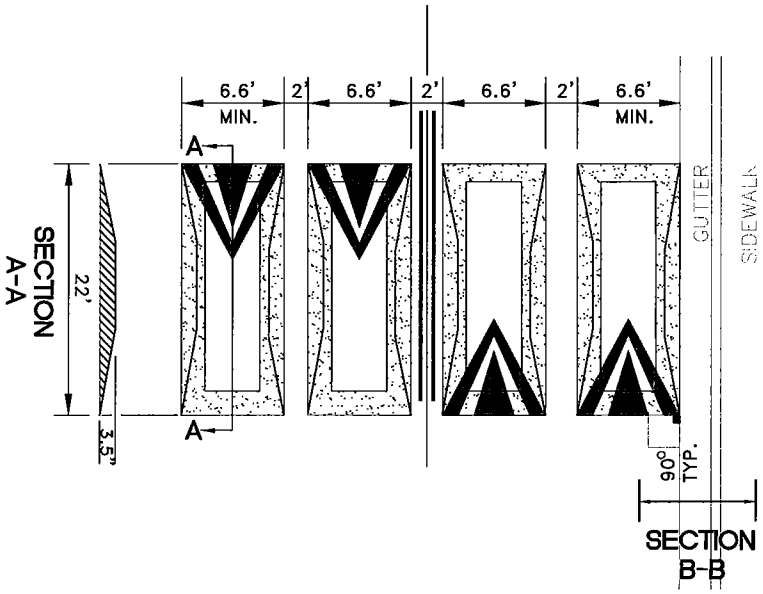

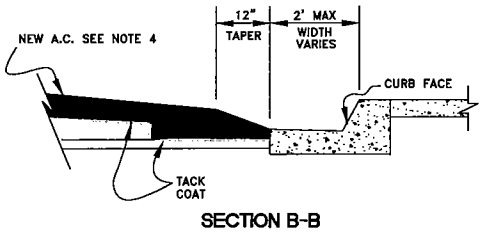

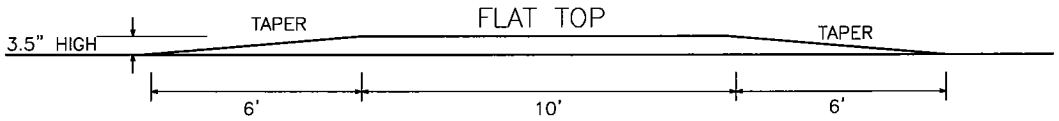

SECTION A-A

NOTES:
1. Cross section shows approximate elevations for 3.5" modified speed table.
2. Modified speed tables shall not be placed over manholes, water valves, survey monuments, junction chambers, in conflict with driveways, or adjacent to fire hydrants.
3. Modified speed tables must be placed at locations approved and specified by the Public Works/Engineering Department.
4. Modified speed tables shall be constructed with an approved D½ Coarse hot mix, per City of Peoria standards OR MAG ⅜" mix. A tack coat shall be applied prior to application of pavement.
5. Contractor must provide verification of cross-section dimensions.
6. Contractor must properly compact tables to preclude excessive settlement.
7. The contractor shall provide a two year warranty on labor and material. Contractee should request contractor to warrant height to be at least 3.25" tall after 24 months.
8. Permanent striping shall be Thermoplastic Hot Tape or 3M STA-Mark Series SMS-5730 or approved equivalent.

Important:
To gain maximum effect, modified speed tables must be the full 3.5". Modified speed tables shall be 3.5" high with an allowable maximum tolerance of ± 0.25". Contractors must not exceed this height based on consideration for emergency and fire department vehicles. Because of this concern, any modified speed tables constructed over 3.75" must be corrected at the contractors expense.

I:\GUIDE\DETAILS\CAD\PE-210-3B

03/17/2008

CITY OF PEORIA
STANDARD DETAIL PE-210-3C
SPEED CUSHION PAVEMENT MARKINGS

APPROVALS: _____ 2/22/08
CITY ENGINEER DATE

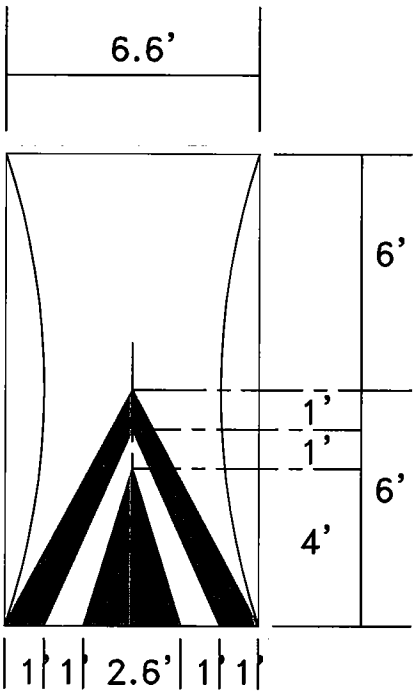

NOTES

1. AFTER INSTALLATION, CONTRACTOR SHALL TEMPORARILY STRIPE THE CUSHIONS WITH WATER BASED PAINT PER ADOT 7.08 SPECS.
2. CONTRACTOR SHALL PERMANENTLY STRIPE THE SPEED CUSHIONS WITH 12" WHITE MARKINGS 30 DAYS AFTER INSTALLATION.
3. PERMANENT STRIPING SHALL BE THERMOPLASTIC HOT TAPE OR 3M STA-MARK SERIES SMS-5730 OR APPROVED EQUIVALENT.
4. APPLY 3M CONTACT CEMENT, E-44 OR APPROVED EQUIVALENT TO THE ROADWAY FOR STRIPING INSTALLATION.

I:\GUIDE\DETAILS\CAD\PE-210-3C

01/31/2008

CITY OF PEORIA
STANDARD DETAIL PE-211
TRENCH PLATING

APPROVALS: Daniel Mack 1/22/07
CITY ENGINEER DATE

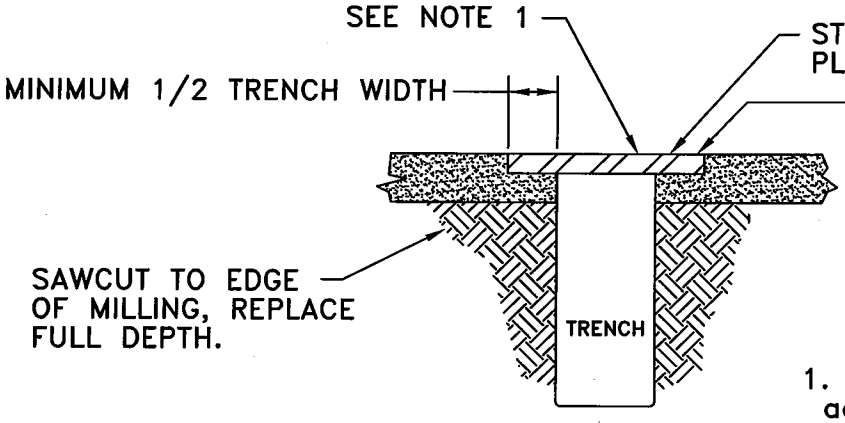

TYPE "A" PLATING

CITY POSTED SPEEDS OF GREATER THAN 25 MPH OR BUS & TRUCK ROUTE

NOTES

1. The contractor shall provide adequate overlap of plate on asphalt to assure no slippage of plate and no collapsing of trench.
2. "Posted Speed" does not include temporary construction signing.

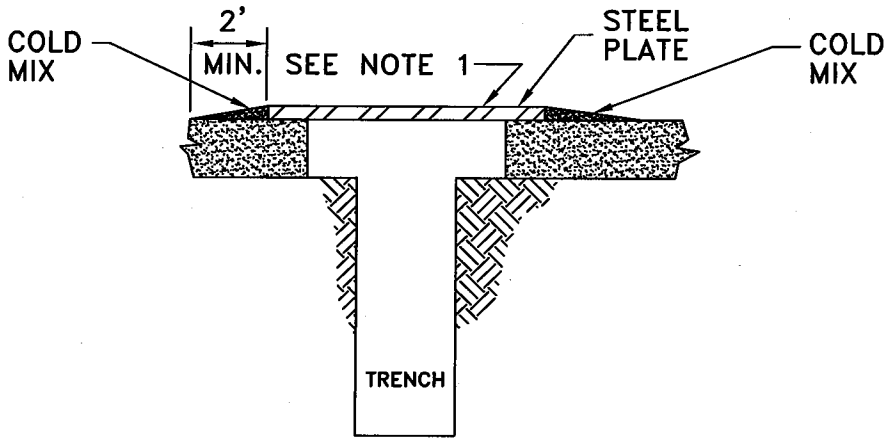

TYPE "B" PLATING

CITY POSTED SPEEDS OF 25 MPH AND UNDER

I:\GUIDE\DETAILS\CAD\PE-211

01/23/2007

CITY OF PEORIA
STANDARD DETAIL PE-241-1
SIDEWALK DUAL RAMP
25' OR 30' RADIUS CURB RETURN

APPROVALS: David Moody 3/14/08
CITY ENGINEER DATE

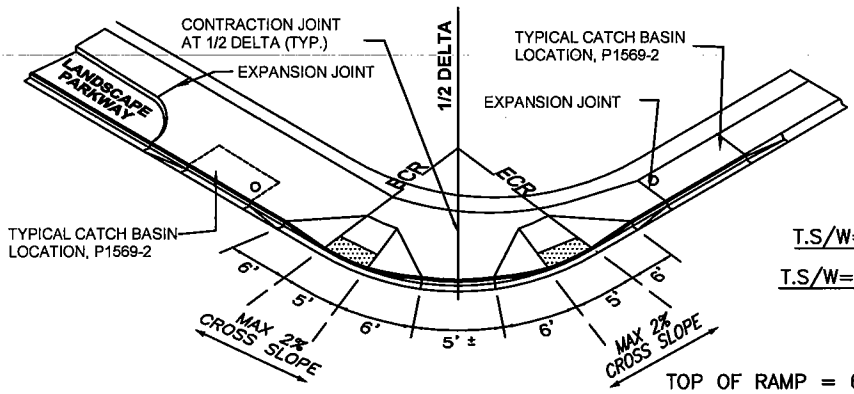

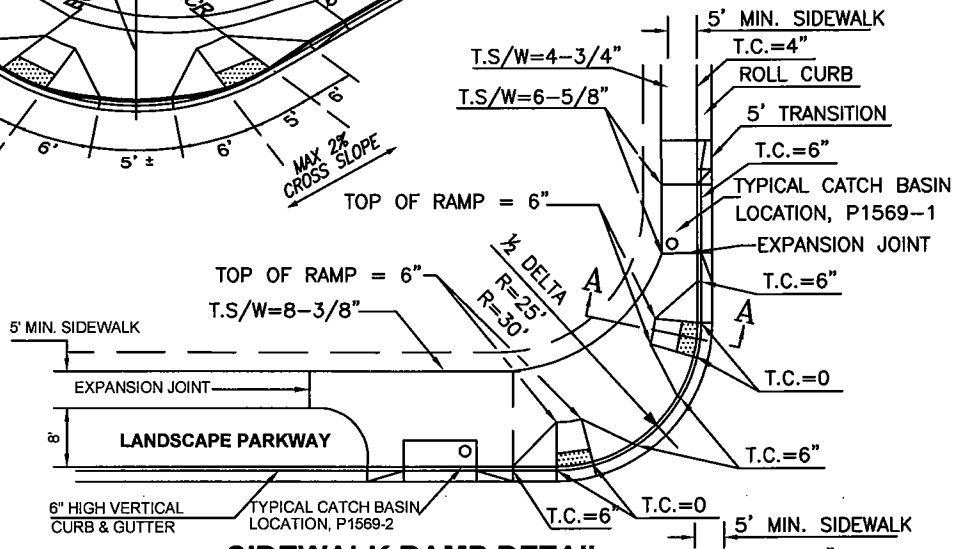

SIDEWALK RAMP DETAIL WITH LANDSCAPE PARKWAY

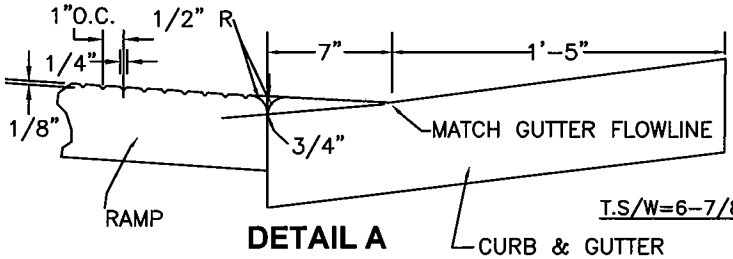

DETAIL A

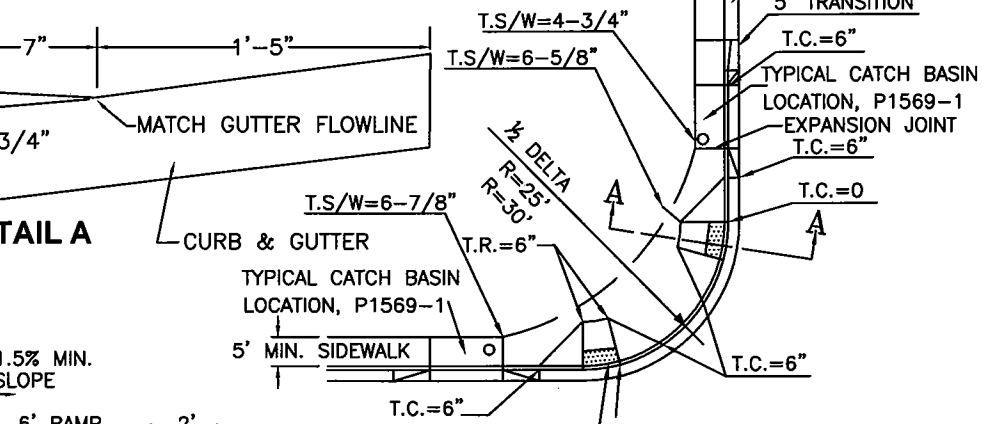

SIDEWALK RAMP DETAIL NO LANDSCAPE PARKWAY

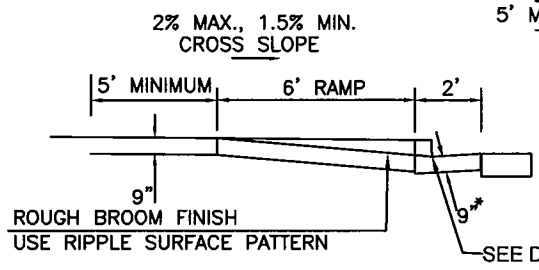

SECTION A-A

I:\GUIDE\DETAILS\CAD\PE-241-1

01/31/2008

CITY OF PEORIA
STANDARD DETAIL PE-241-2
SIDEWALK DUAL RAMP
35' RADIUS CURB RETURN

APPROVALS: David J. Moore 3/10/08
CITY ENGINEER DATE

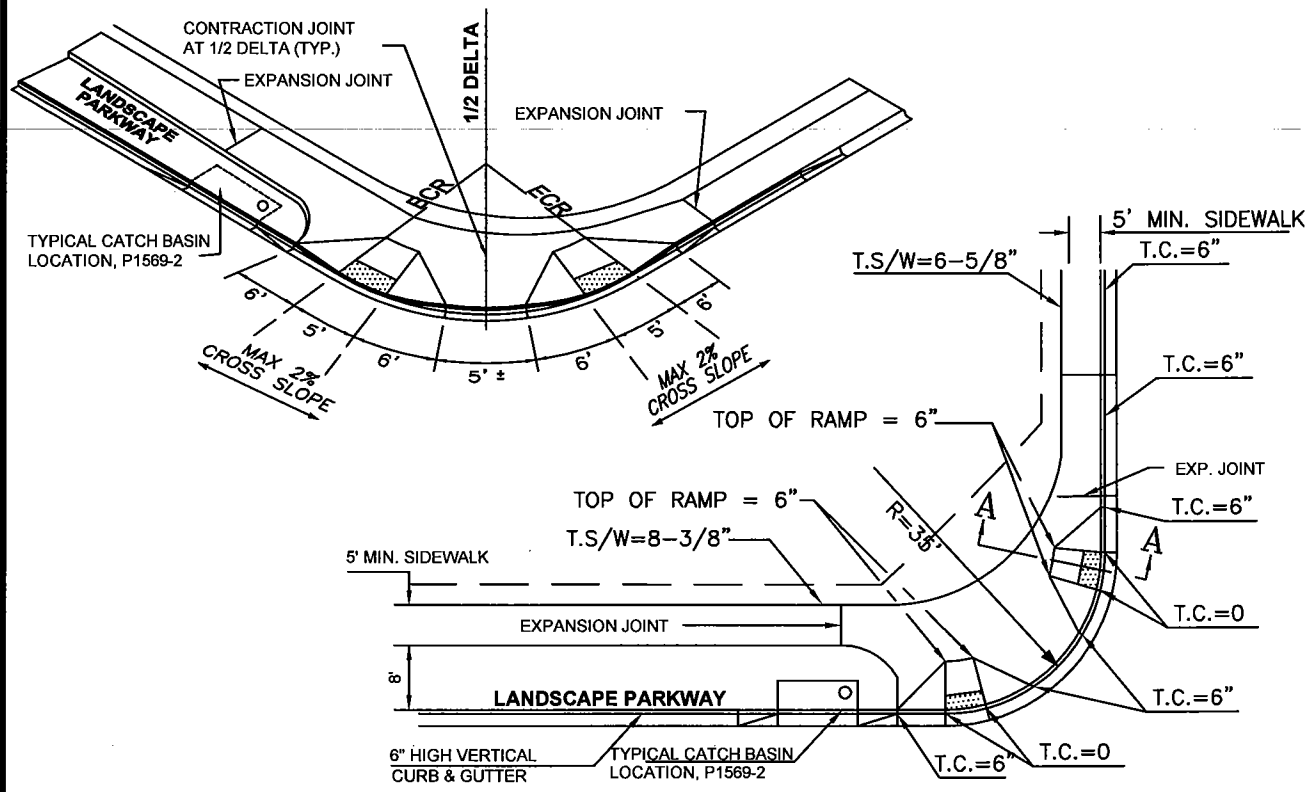

SIDEWALK RAMP DETAIL WITH LANDSCAPE PARKWAY

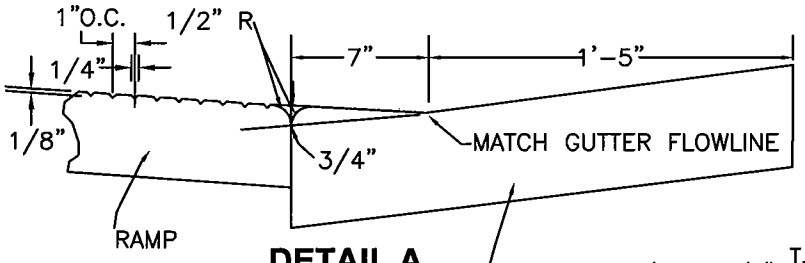

DETAIL A

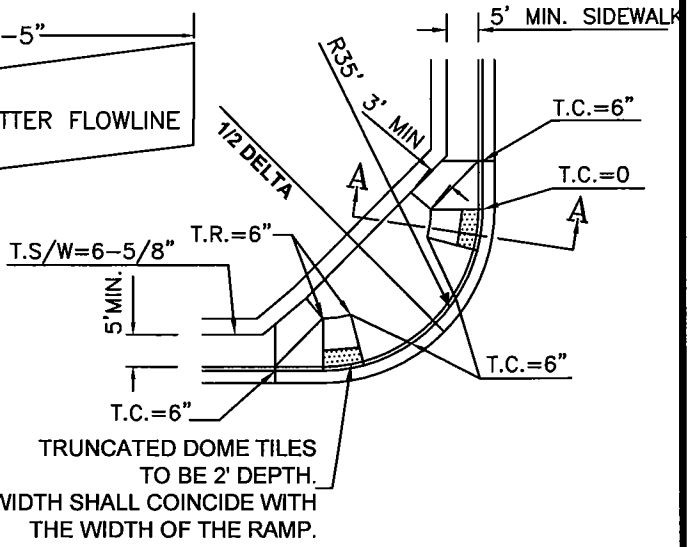

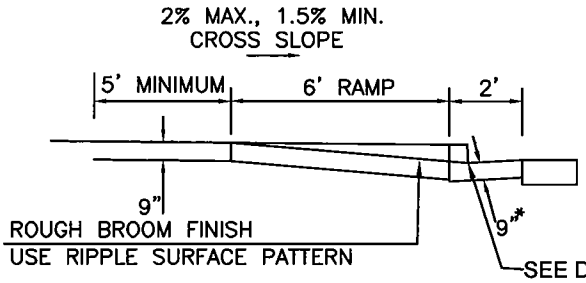

SECTION A-A

SIDEWALK RAMP DETAIL NO PLANTERS

I:\GUIDE\DETAILS\CAD\PE-241-2

01/31/2008

CITY OF PEORIA
STANDARD DETAIL PE-241-3
SIDEWALK RAMP NOTES

APPROVALS: _____ 2/11/08
CITY ENGINEER DATE

NOTES:

1. CONTROL ELEVATIONS SHOWN ARE IN RELATION TO THE GUTTER AND ARE LOCATED RADIALLY. GUTTER ELEVATION = 0"

2. CONCRETE CURB AND GUTTER AT CURB RETURNS WITH RAMPS SHALL BE M.A.G. CLASS A. CONCRETE SIDEWALK AND RAMPS AT CURB RETURNS SHALL BE M.A.G. CLASS A.

3. RAMP CURBS MAY BE POURED MONOLITHIC WITH A CONSTRUCTION JOINT.

4. EXPANSION JOINT FILLER SHALL BE 1/2" BITUMINOUS TYPE PREFORMED EXPANSION JOINT FILLER A.S.T.M. D-1751, INSTALLED AS SHOWN ON MAG DETAIL 230.

5. USE 8' - 10' LANDING WITH TRAILS.

6. * 9" LANDING AND RAMPS ON MAJOR OR COLLECTOR STREETS AND 4" LANDING AND RAMPS ON LOCAL STREETS.

7. SIDEWALK LOCATED BETWEEN BACK OF WALK AND RAMP SHALL BE 4', MINIMUM.

8. DUAL RAMPS TO BE INSTALLED AT ALL ARTERIAL INTERSECTIONS AND AT COLLECTOR-COLLECTOR INTERSECTIONS.

9. RAMPS MAY BE ROTATED AS NECESSARY TO PROVIDE SHORTEST TRAVEL PATH.

10. SOME MODIFICATION OF THE RAMP DETAILS WILL BE NECESSARY TO ACCOMODATE CITY OF PEORIA SIDEWALK WIDTH REQUIREMENTS.

11. TRUNCATED DOMES ARE TO BE *CASTinTACT* OR *StrongGo* OR PREVIOUSLY APPROVED EQUAL.

I:\GUIDE\DETAILS\CAD\PE-241-3

CITY OF PEORIA
STANDARD DETAIL PE-251-1
RETURN TYPE DRIVEWAYS WITH ATTACHED SIDEWALK

APPROVALS: _____ 2/11/08
CITY ENGINEER DATE

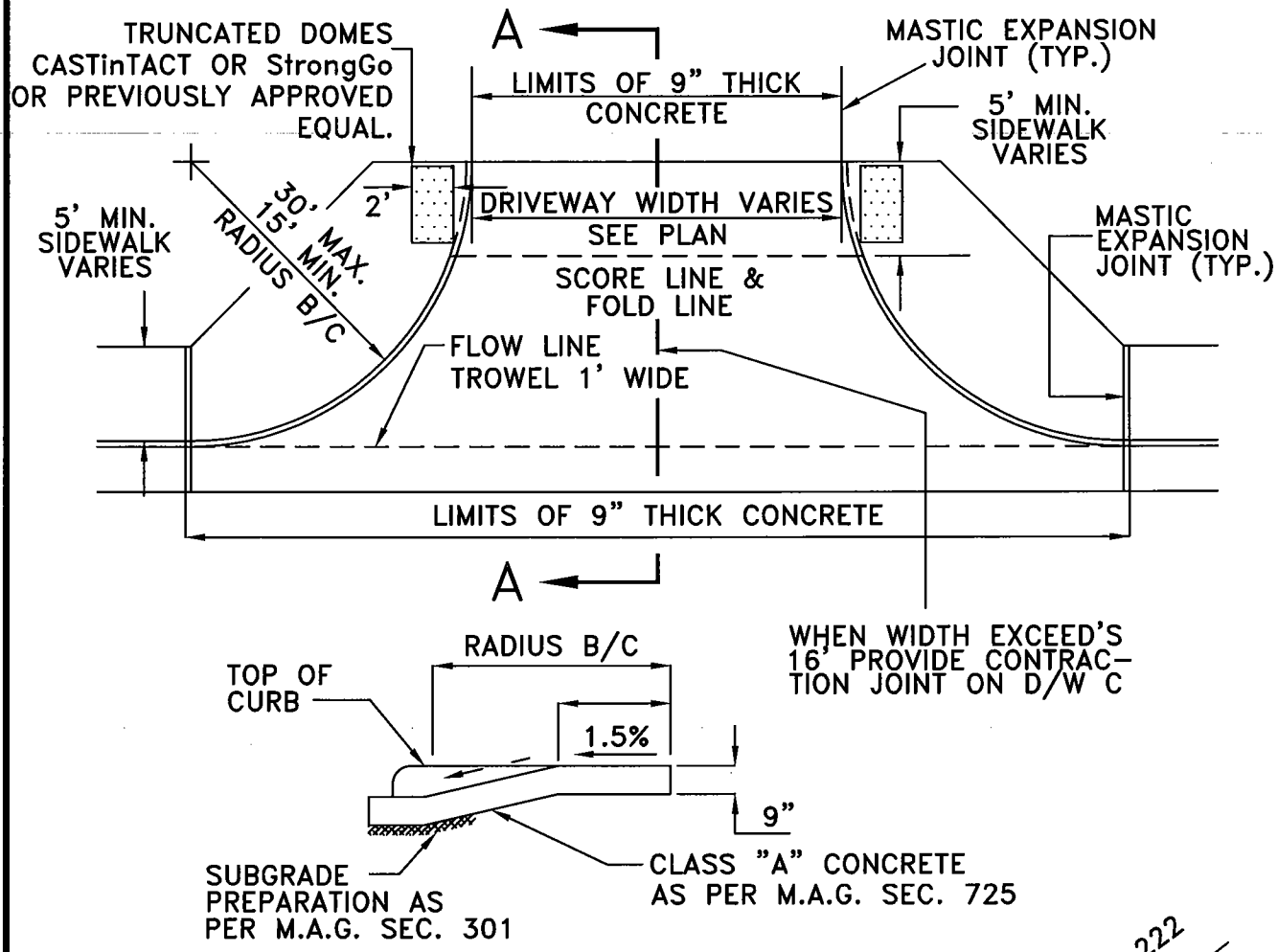

SECTION A-A

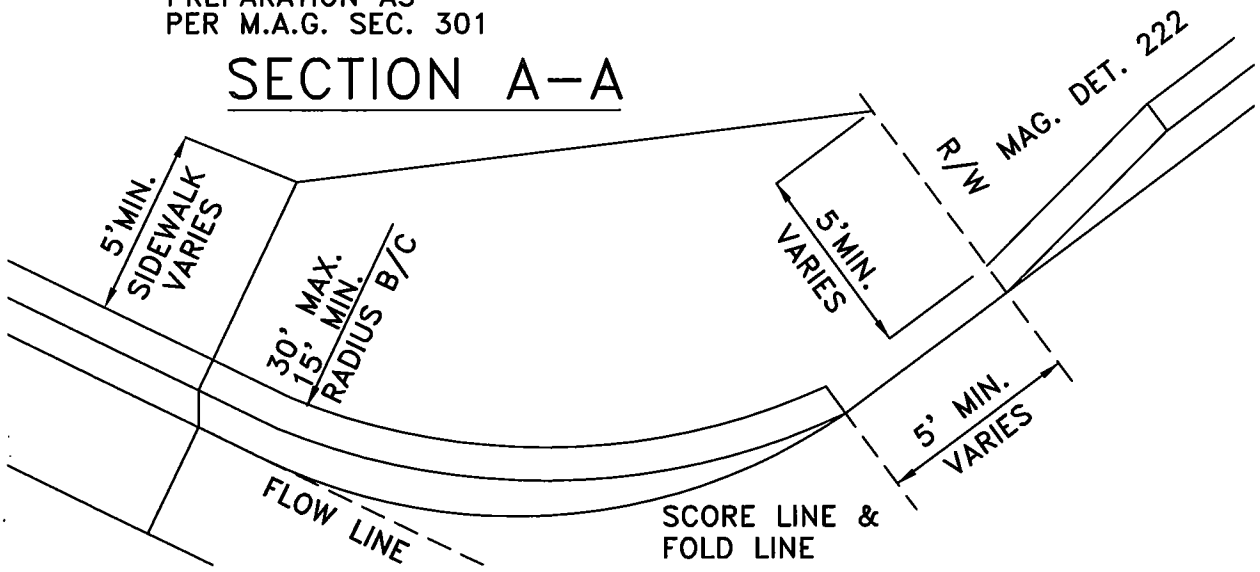

NOTES:
EXPANSION JOINT FILLER SHALL BE 1/2 INCH BITUMINUS TYPE PRE-FORMED EXPANSION JOINT FILLER, A.S.T.M. D-1751

I:\GUIDE\DETAILS\CAD\PE-251-1

01/24/2008

CITY OF PEORIA
STANDARD DETAIL PE-251-2
RETURN TYPE DRIVEWAYS WITH DETACHED SIDEWALK

APPROVALS: _____ CITY ENGINEER 3/14/08 DATE

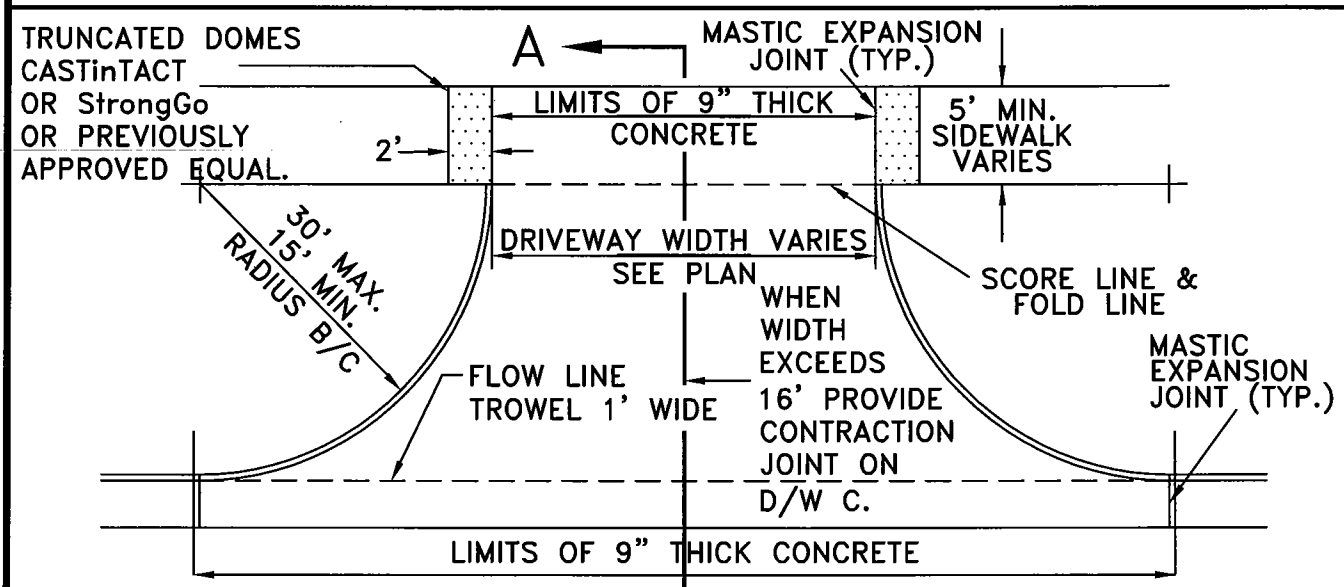

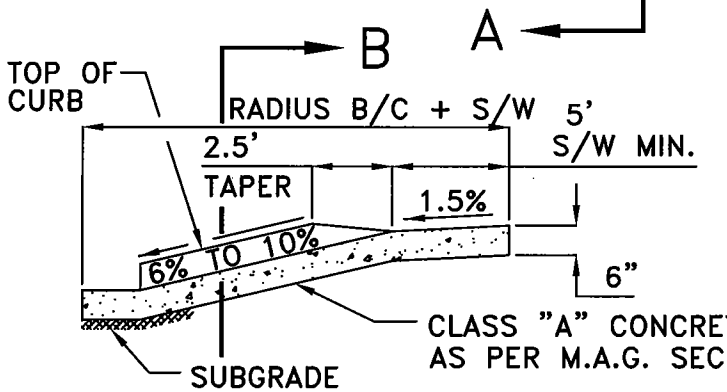

SECTION A-A

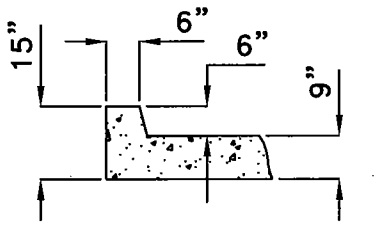

SECTION B-B

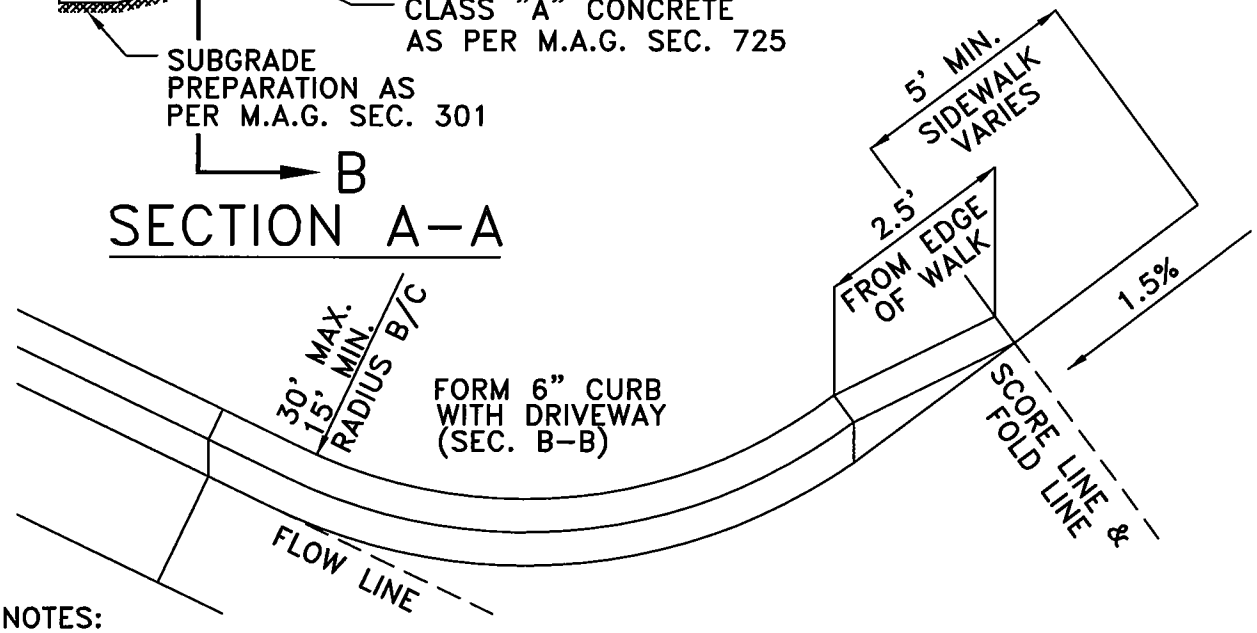

NOTES:
EXPANSION JOINT FILLER SHALL BE 1/2 INCH BITUMINUS TYPE PRE-FORMED EXPANSION JOINT FILLER, A.S.T.M. D-1751

I:\GUIDE\DETAILS\CAD\PE-251-2

01/24/2008

CITY OF PEORIA
STANDARD DETAIL PE-251-3
DRIVEWAY CRITERIA

APPROVALS: David J Moss 3/18/08
CITY ENGINEER DATE

	RESIDENTIAL		COMMERCIAL INDUSTRIAL	
	SINGLE FAMILY	MULTI-FAMILY	SINGLE BUSINESS	MULTI-BUSINESS
STD. CONSTRUCTION DETAIL	MCDOT 2033	PE-251-1 OR PE-251-2	PE-251-1 OR PE-251-2	PE-251-1 OR PE-251-2
STANDARD WIDTH (TWO WAY)	16'	24'	30'	30'
MIN. WIDTH (TWO WAY)	16'	24'	24'	24'
MAX. WIDTH (TWO WAY)	24'	40' (2)	30'	40' (2)
MIN. SPACE BETWEEN DRIVES (INSIDE EDGE TO INSIDE EDGE)	10'	(4)	(4)	(4)
MIN. DIST. FROM INTERSECTION (NEAREST P.C. TO INSIDE EDGE)	25'	(5)	(5)	(5)
MAX. NO. OF DRIVES	1	2 PER FIRST 19 UNITS	2 PER STREET	1 PER 225' FRONTAGE
		3 PER 1200' FRONTAGE		2 PER 800' FRONTAGE 3 PER 1200' FRONTAGE
		4 PER 2600' FRONTAGE		4 PER 2600' FRONTAGE

NOTES:

1. DETAIL PE-251-1 OR PE-251-2 MAY BE USED ON ARTERIAL STREETS.
2. (a) HIGH VOLUME DRIVEWAY WITH TWO OUTBOUND APPROACH LANES.
   (b) REQUIRES DECELERATION LANE UNLESS OTHERWISE APPROVED BY TRAFFIC ENGINEER.
   (c) BE INCREASED TO 46' WITH ADDITION OF RAISED MEDIAN.
3. ALL DRIVEWAY WINGS OR P.C.'S WILL BEGIN NO CLOSER THAN 5' FROM ANY PROPERTY LINE.
4. SEE TABLE 1 OF THE ACCESS MANAGEMENT GUIDELINES.
5. SEE TABLE 2 OF THE ACCESS MANAGEMENT GUIDELINES.

I:\GUIDE\DETAILS\CAD\PE-251-3

01/08/2008

CITY OF PEORIA
STANDARD DETAIL PE-270
WATER VALVE ADJUSTMENT

APPROVALS: _____ 8/28/08
CITY ENGINEER DATE

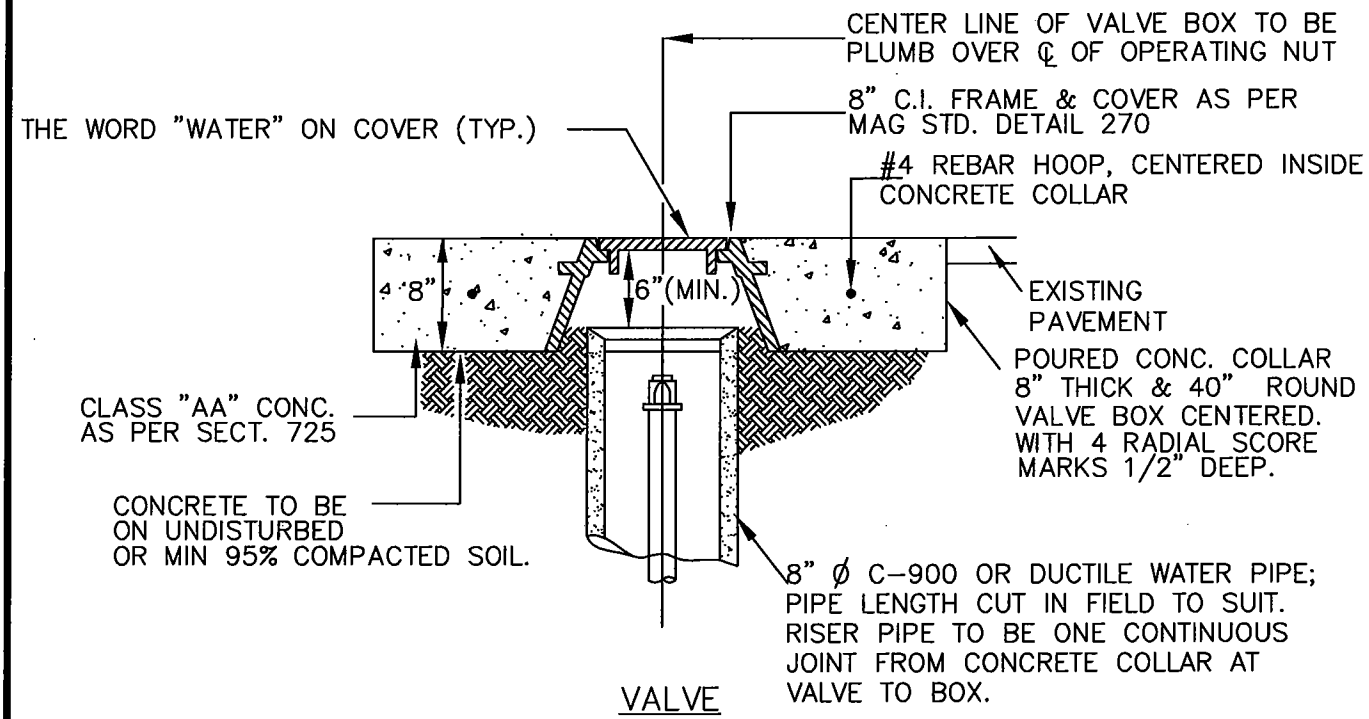

VALVE

NOT TO SCALE

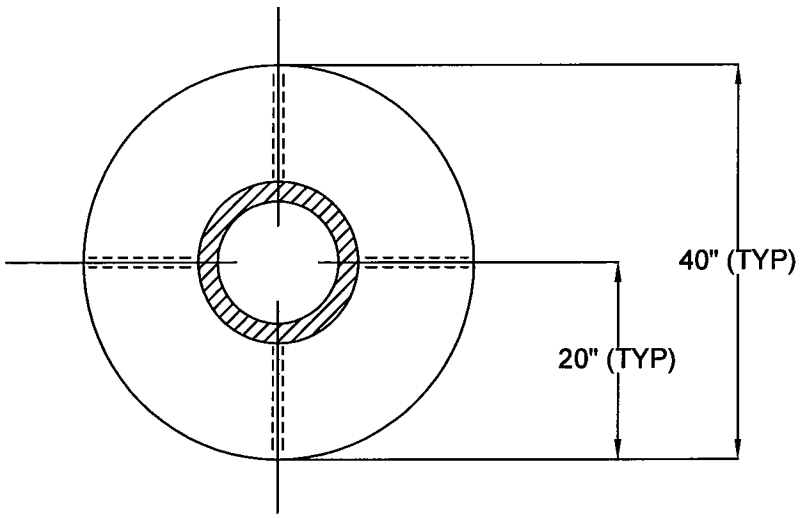

VIEW A-A

I:\GUIDE\DETAILS\CAD\PE-270

03/14/20083

CITY OF PEORIA
STANDARD DETAIL PE-271
SEWER MANHOLE ADJUSTMENTS

APPROVALS: _____ 5/7/07
CITY ENGINEER DATE

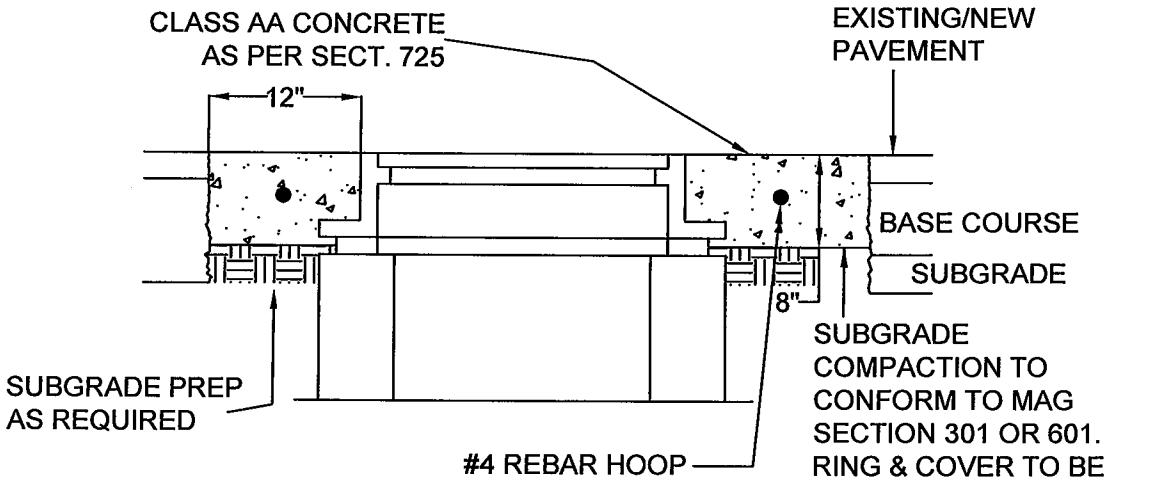

MANHOLE

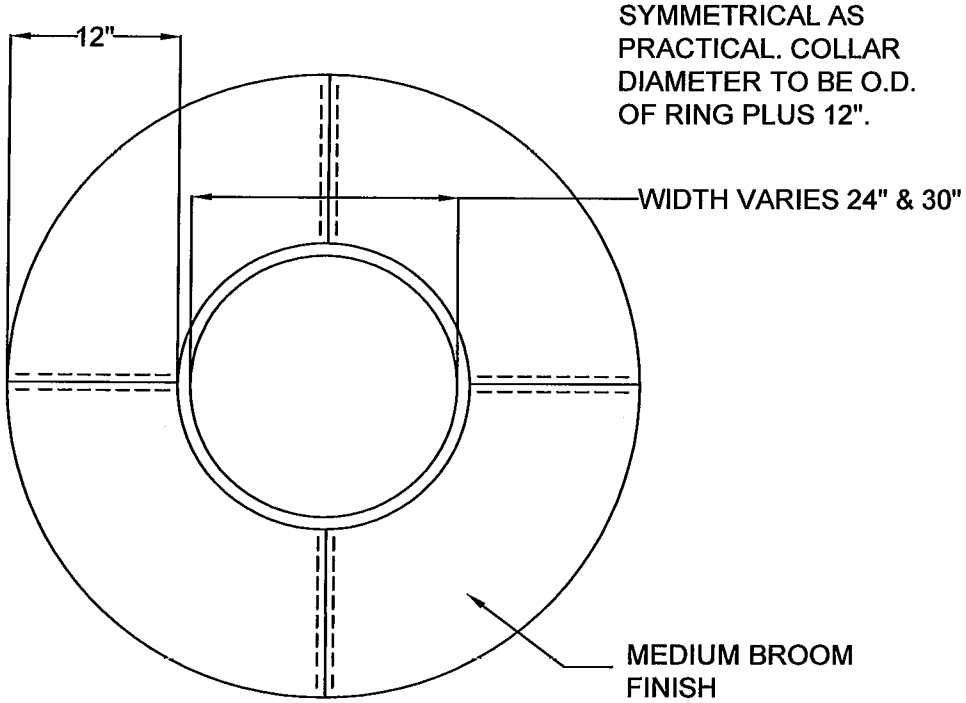

TOP VIEW

I:\GUIDE\DETAILS\CAD\PE-271

05/22/2007

CITY OF PEORIA
STANDARD DETAIL PE-346
BUTTERFLY VALVE OPERATOR MANHOLE

APPROVALS:

CITY ENGINEER — DATE 3/10/08

UTILITIES DIRECTOR — DATE 2/12/08

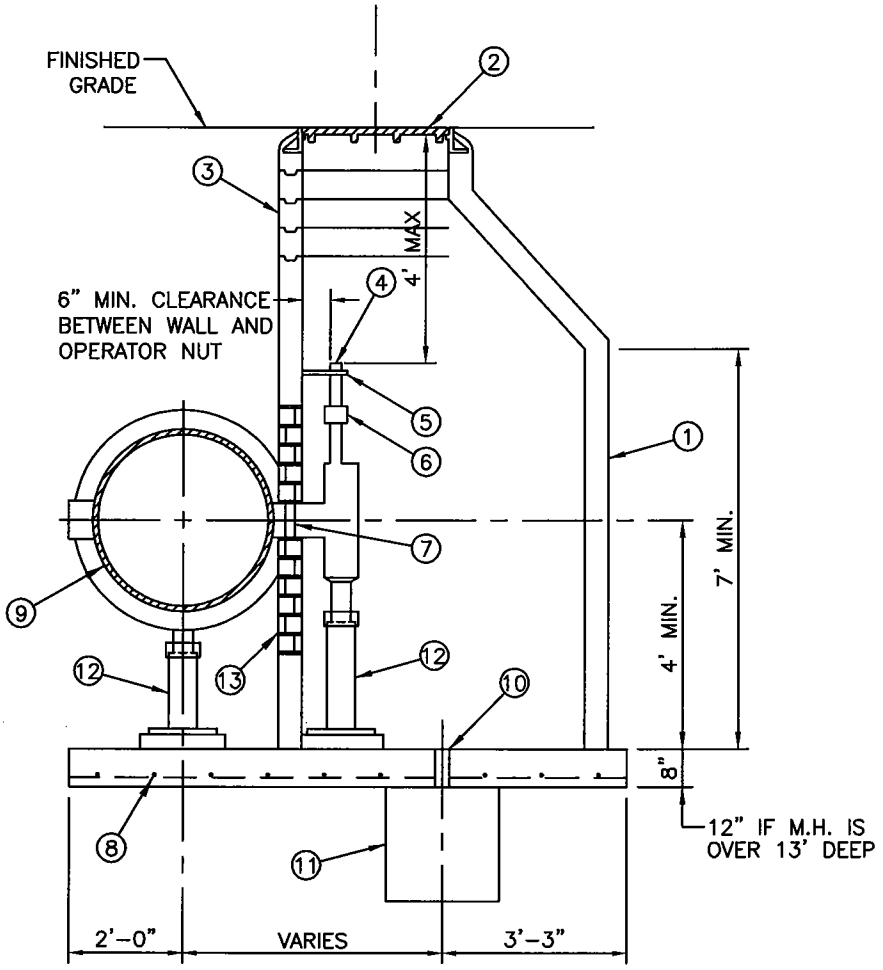

NOTES:

1. 60" I.D. MANHOLE SHAFT PER MAG STD. DET. 420, TYPE "A" TOP
2. 30" MANHOLE FRAME & COVER PER MAG STD. DET. 424
3. GROUTED ADJUSTING RINGS
4. OPERATOR NUT
5. WALL BRACKET
6. PACKING GLAND
7. 6" EXTENSION
8. #4 REBAR 12" ON CENTER EACH WAY 2" CLEAR TYPICAL FOR PRE-CAST BASE
9. BUTTERFLY VALVE
10. 3" DIAMETER DRAIN PVC SLEEVE REQUIRES GRATE.
11. 8 CU. FT. GRAVEL SUMP - 1" MINUS WASHED ROCK.
12. ADJUSTABLE PIPE SADDLE SUPPORT
13. RECTANGULAR CUT-OUT IN MANHOLE SHAFT, FILL SPACE BETWEEN SHAFT AND PIPE WITH 1" SHEET FOAM, BRICK AND MORTAR
14. DETAIL TO BE USED ON 24" OR ABOVE WATER LINES.

I:\GUIDE\DETAILS\CAD\PE-346

01/31/2008

CITY OF PEORIA
STANDARD DETAIL PE-351-1
CROSS CONNECTION CONTROL 3 - INCHES & LARGER REDUCED PRESSURE BACKFLOW PREVENTER

APPROVALS:

CITY ENGINEER — DATE 3/10/08

UTILITIES DIRECTOR — DATE 2/12/08

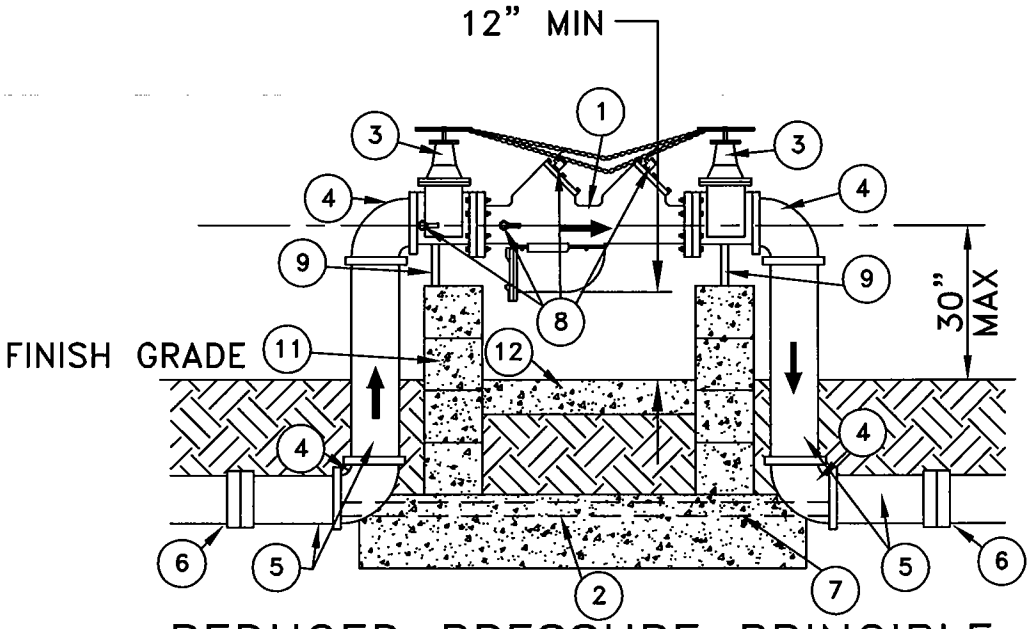

REDUCED PRESSURE PRINCIPLE

LIST OF MATERIALS:

1. APPROVED BACKFLOW ASSEMBLY.
2. COAT WITH COAL TAR EPOXY OR UTILIZE MANUFACTURER'S EPOXY COVERED SETTER.
3. RESILIANT SEATED GATE VALVE. (NON FIRE LINE) NON RISING STEM
4. 90° ELBOW (FLANGED D.I.P. 3-INCHES THRU 10-INCHES).
5. PIPE SPOOL (FLANGED D.I.P. 3-INCHES THRU 10-INCHES).
6. MECHANICAL JOINT
7. 3" X 3" X 1/4" STEEL ANGLE BOLT TO FLANGE AT EACH END OR UTILIZE MANUFACTURER'S SETTER (SUCH AS WILKINS, FEBCO, OR EQUIVALENT).
8. TEST COCK (4 REQUIRED).
9. ADJUSTABLE PIPE SUPPORT .
10. 8" X 8" X 16" CONCRETE BLOCK FILLED WITH MORTAR.
11. CONCRETE PAD FROM SUPPORT TO SUPPORT (4-INCHES DEEP X 12-INCHES WIDE).
12. CONSTRUCT 6" THICK CONCRETE BASE.

I:\GUIDE\DETAILS\CAD\PE-351-1

01/30/2008

CITY OF PEORIA
STANDARD DETAIL PE-351-2
CROSS CONNECTION CONTROL 3 - INCHES & LARGER REDUCED PRESSURE BACKFLOW PREVENTER

APPROVALS: [signature] 3/10/08 [signature] 2/12/08

CITY ENGINEER DATE UTILITIES DIRECTOR DATE

NOTES:

A. CONTACT CITY OF PEORIA ENVIRONMENTAL/INDUSTRIAL USERS DIVISION FOR LIST OF APPROVED ASSEMBLIES.

B. THE FOUR TEST COCKS SHALL BE FITTED WITH BRASS PLUGS OR TEST COCK ADAPTERS AND CAPS. TEST COCKS SHALL BE USED FOR TESTING ONLY.

C. INSTALLATION SHALL BE PROTECTED BY SAFETY POSTS (BOLLARDS) IF NEAR TRAFFIC AREAS PER M.A.G. STANDARD DETAIL 140.

D. FINISHED MATERIAL UNDER BACKFLOW ASSEMBLY SHALL BE ADEQUATE TO PREVENT SUBSIDENCE OF ASSEMBLY.

E. ASSEMBLY SHALL BE PAINTED TAN OR COLOR TO MATCH BACKGROUND. DO NOT PAINT THE NAME PLATE OR ANY BRASS PARTS OF THE ASSEMBLY.

F. INSPECTIONS REQUIRED FOR: PIERS, THRSUTBLOCKS, ANGLE STEEL AND/OR SETTER ASSEMBLY. (BY CITY OF PEORIA CROSS CONNECTION STAFF)

G. BOTTOM OF LOWEST POINT ON ASSEMBLY TO BE 12-INCHES MIN. AND 30-INCHES MAX. TO ASSEMBLY CENTERLINE ABOVE CONCRETE PAD.

H. MINIMUM CLEARANCE FROM FRONT OF TEST COCKS TO NEAREST PERMANENT SURFACE SHALL BE 12-INCHES.

I. ASSEMBLY MUST BE INSPECTED BY CITY OF PEORIA ENVIRONMENTAL DIVISION AND TESTED BY AN AUTHORIZED & CERTIFIED TESTER.

J. PLUMBING PERMIT REQUIRED FOR INSTALLATION.

K. THRUST BLOCK PER MAG STANDARD DETAIL 380 IF SETTER IS NOT USED.

I:\GUIDE\DETAILS\CAD\PE-351-2

01/30/2008

CITY OF PEORIA
STANDARD DETAIL PE-352-1
CROSS CONNECTION CONTROL 2 1/2 - INCHES & SMALLER REDUCED PRESSURE BACKFLOW PREVENTER

APPROVALS:

CITY ENGINEER — DATE 3/10/08

UTILITIES DIRECTOR — DATE 2/12/08

OUTSIDE INSTALLATION

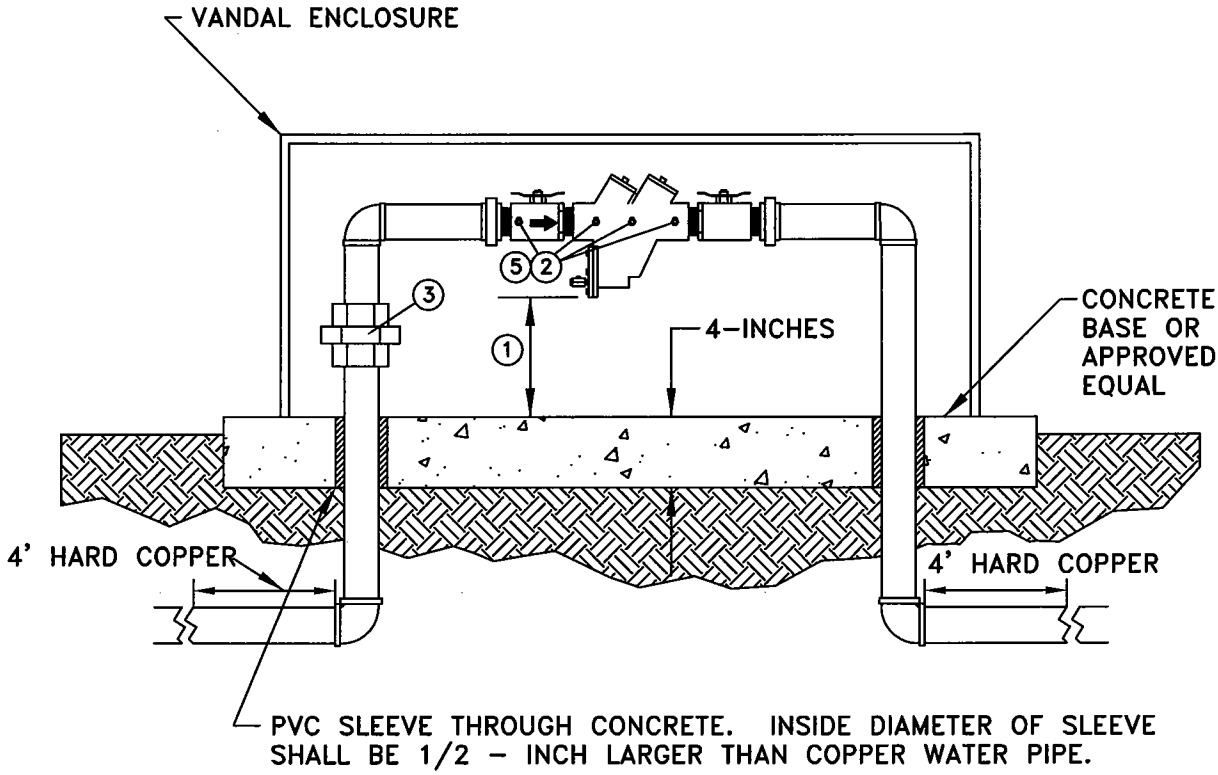

NOTES:

1. BOTTOM OF ASSEMBLY MUST BE AT LEAST 12 - INCHES ABOVE THE SURFACE IMMEDIATELY BELOW THE RELIEF VALVE OPENING BUT NO MORE THAN 30 - INCHES ABOVE CONCRETE PAD.
2. MINIMUM CLEARANCE IN FRONT OF TEST COCKS TO NEAREST PERMANENT SURFACE SHALL BE 12 - INCHES.
3. MINIMUM OF ONE UNION REQUIRED, TYPE "L" HARD COPPER REQUIRED.
4. ASSEMBLIES MUST BE INSPECTED BY THE CITY OF PEORIA ENVIRONMENTAL DIVISION AND TESTED BY A CITY RECOGNIZED TESTER.
5. ALL TEST COCKS SHALL HAVE BRASS PLUGS OR TEST COCK ADAPTERS AND CAPS IN PLACE. TEST COCKS SHALL BE USED FOR TESTING ONLY.
6. A PLUMBING PERMIT IS REQUIRED FOR INSTALLATION.
7. ASSEMBLIES MUST BE INSTALLED AS DESIGNED AND CONSTRUCTED BY THE MANUFACTURER.
8. VANDAL ENCLOSURE TO BE "LOCKBOX" OR APPROVED EQUAL.

I:\GUIDE\DETAILS\CAD\PE-352-1

01/30/2008

CITY OF PEORIA
STANDARD DETAIL PE-352-2
CROSS CONNECTION CONTROL 2 1/2 - INCHES & SMALLER REDUCED PRESSURE BACKFLOW PREVENTER

APPROVALS:

CITY ENGINEER — DATE 3/10/08

UTILITIES DIRECTOR — DATE 2/12/08

INSIDE INSTALLATION

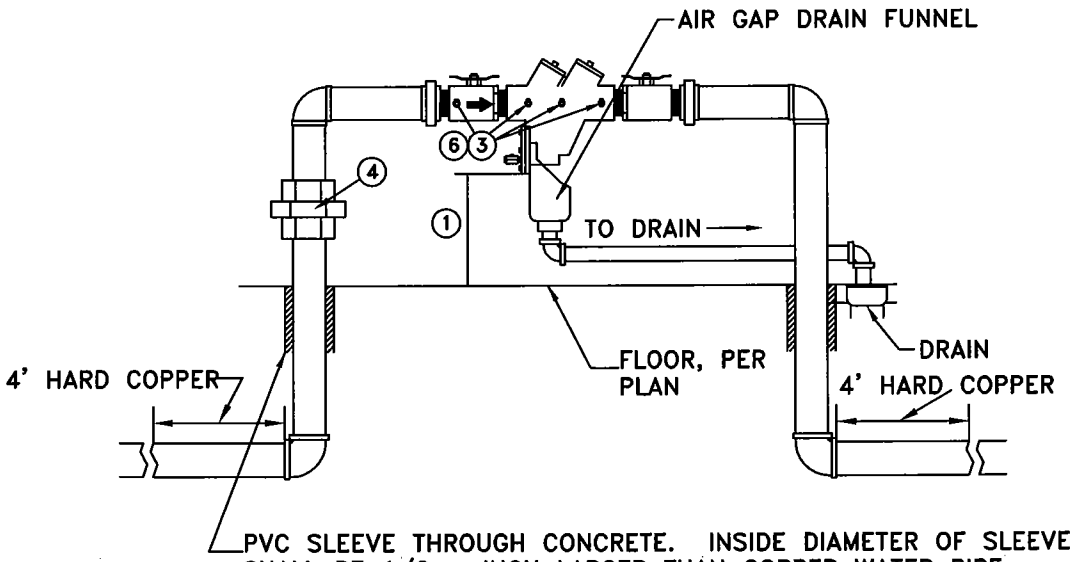

MUST HAVE DRAIN IF INSTALLED INSIDE

NOTES:

1. BOTTOM OF ASSEMBLY MUST BE AT LEAST 12 - INCHES ABOVE THE FINISHED FLOOR IMMEDIATELY BELOW THE RELIEF VALVE OPENING.
2. ASSEMBLIES INSTALLED ABOVE 5-FEET FROM THE FLOOR MUST COMPLY WITH CURRENT IPC '06.
3. MINIMUM CLEARANCE IN FRONT OF TEST COCKS TO NEAREST PERMANENT SURFACE SHALL BE 12 - INCHES.
4. MINIMUM OF ONE UNION REQUIRED, TYPE "L" HARD COPPER REQUIRED.
5. ASSEMBLIES MUST BE INSPECTED BY THE CITY OF PEORIA ENVIRONMENTAL/ INDUSTRIAL USERS DIVISION AND TESTED BY A CITY RECOGNIZED TESTER.
6. ALL TEST COCKS SHALL HAVE BRASS PLUGS OR TEST COCK ADAPTORS AND CAPS IN PLACE. TEST COCKS SHALL BE USED FOR TESTING ONLY.
7. A PLUMBING PERMIT IS REQUIRED FOR INSTALLATION.
8. CONTACT CITY OF PEORIA ENVIRONMENTAL/INDUSTRIAL USERS DIVISION FOR LIST OF APPROVED ASSEMBLIES.
9. ASSEMBLIES MUST BE INSTALLED AS SHIPPED.
10. PIPING TO COMPLY TO CURRENT COP STANDARDS.

I:\GUIDE\DETAILS\CAD\PE-352-2

01/31/2008

CITY OF PEORIA
STANDARD DETAIL PE-353-1
CROSS CONNECTION CONTROL 3 - INCHES & LARGER DOUBLE CHECK VALVE ASSEMBLY

APPROVALS:

CITY ENGINEER — DATE 2/27/07

UTILITIES DIRECTOR — DATE 2/27/07

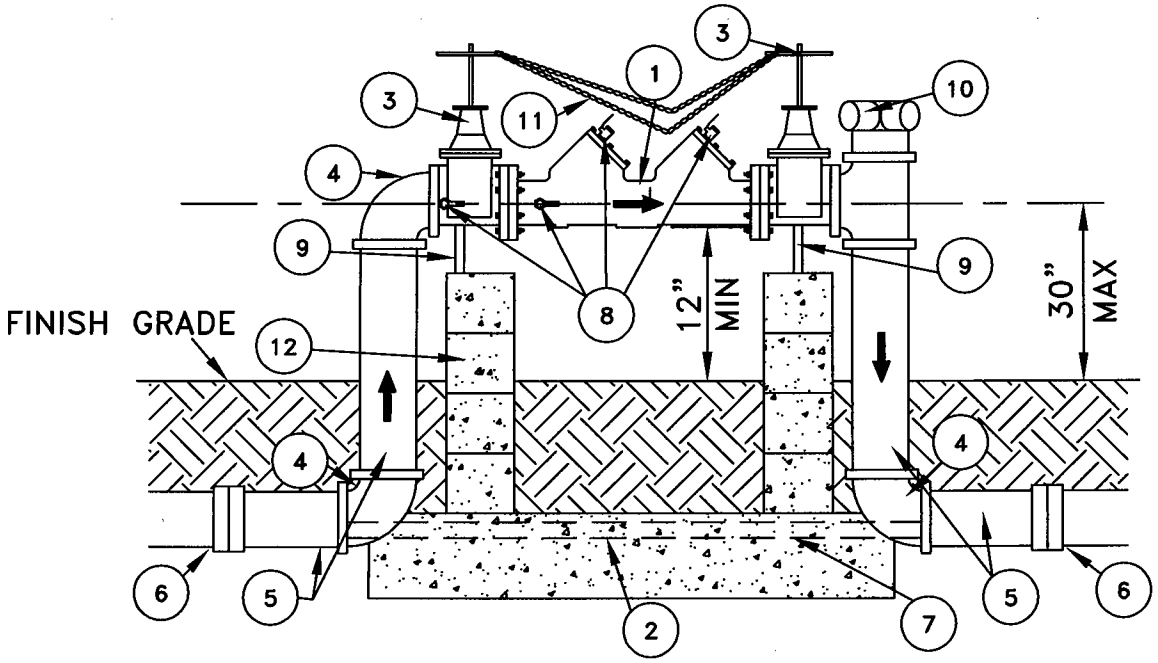

LIST OF MATERIALS

1. APPROVED BACKFLOW ASSEMBLY.
2. COAT WITH COAL TAR EPOXY OR UTILIZE MANUFACTURER'S EPOXY COVERED SETTER.
3. RESILIANT SEATED GATE VALVE. O.S. & Y. (FIRE LINE CONNECTION)
4. 90° ELBOW (FLANGED D.I.P. 3-INCHES THRU 10-INCHES).
5. PIPE SPOOL (FLANGED D.I.P. 3-INCHES THRU 10-INCHES).
6. MECHANICAL JOINT
7. 3" X 3" X 1/4" STEEL ANGLE BOLT TO FLANGE AT EACH END OR UTILIZE MANUFACTURER'S SETTER (SUCH AS WILKINS, FEBCO, OR EQUIVALENT).
8. TEST COCK (4 REQUIRED)
9. ADJUSTABLE PIPE SUPPORT
10. SIAMESE FIRE CONNECTION (CONTACT PEORIA F.D. FOR SPECIFIC REQUIREMENTS)
11. CHAIN & LOCK (FIRE LINE MAY BE REQUIRED TO BE ELECTRONICALLY MONITORED, SEE P.F.D. FOR DETAILS, VALVES. CONTACT PEORIA FIRE DEPARTMENT FOR SPECIFIC REQUIREMENTS.)
12. 8" X 8" X 16" CONCRETE BLOCK FILLED WITH MORTAR

01/23/2007

I:\GUIDE\DETAILS\CAD\PE-353-1

CITY OF PEORIA
STANDARD DETAIL PE-353-2
CROSS CONNECTION CONTROL 3 - INCHES & LARGER DOUBLE CHECK VALVE ASSEMBLY

APPROVALS:

CITY ENGINEER	3/10/08 DATE	UTILITIES DIRECTOR	3/12/08 DATE

NOTES:

A. CONTACT CITY OF PEORIA ENVIRONMENTAL/INDUSTRIAL USERS DIVISION FOR LIST OF APPROVED ASSEMBLIES.

B. THE FOUR TEST COCKS SHALL BE FITTED WITH BRASS PLUGS OR TEST COCK ADAPTERS AND CAPS. TEST COCKS SHALL BE USED FOR TESTING ONLY.

C. INSTALLATION SHALL BE PROTECTED BY SAFETY POSTS (BOLLARDS) IN TRAFFIC AREAS PER M.A.G. STANDARD DETAIL 140.

D. FINISHED MATERIAL UNDER BACKFLOW ASSEMBLY SHALL BE ADEQUATE TO PREVENT SUBSIDENCE OF ASSEMBLY.

E. ASSEMBLY SHALL BE PAINTED TAN OR COLOR TO MATCH BACKGROUND. DO NOT PAINT THE NAME PLATE OR ANY BRASS PARTS OF THE ASSEMBLY.

F. INSPECTIONS REQUIRED FOR: PIERS, THRUSTBLOCKS, ANGLE STEEL AND/OR SETTER ASSEMBLY.

G. BOTTOM OF LOWEST POINT ON ASSEMBLY TO BE 12-INCHES MIN. AND 30-INCHES MAX. TO ASSEMBLY CENTERLINE ABOVE CONCRETE PAD.

H. MINIMUM CLEARANCE FROM FRONT OF TEST COCKS TO NEAREST PERMANENT SURFACE SHALL BE 12-INCHES.

I. ASSEMBLY MUST BE INSPECTED BY CITY OF PEORIA ENVIRONMENTAL/INDUSTRIAL USERS DIVISION AND TESTED BY AN AUTHORIZED AND CERTIFIED TESTER.

J. PLUMBING PERMIT REQUIRED FOR INSTALLATION.

K. THRUST BLOCK PER MAG STANDARD DETAIL 380 IF SETTER IS NOT USED.

I:\GUIDE\DETAILS\CAD\PE-353-2

01/30/2008

CITY OF PEORIA
STANDARD DETAIL PE-355
PRESSURE VACUUM BREAKER ASSEMBLY
RESIDENTIAL

APPROVALS: David Mack 3/10/08 — CITY ENGINEER — DATE
Stephen Bontrager 2/12/08 — UTILITIES DIRECTOR — DATE

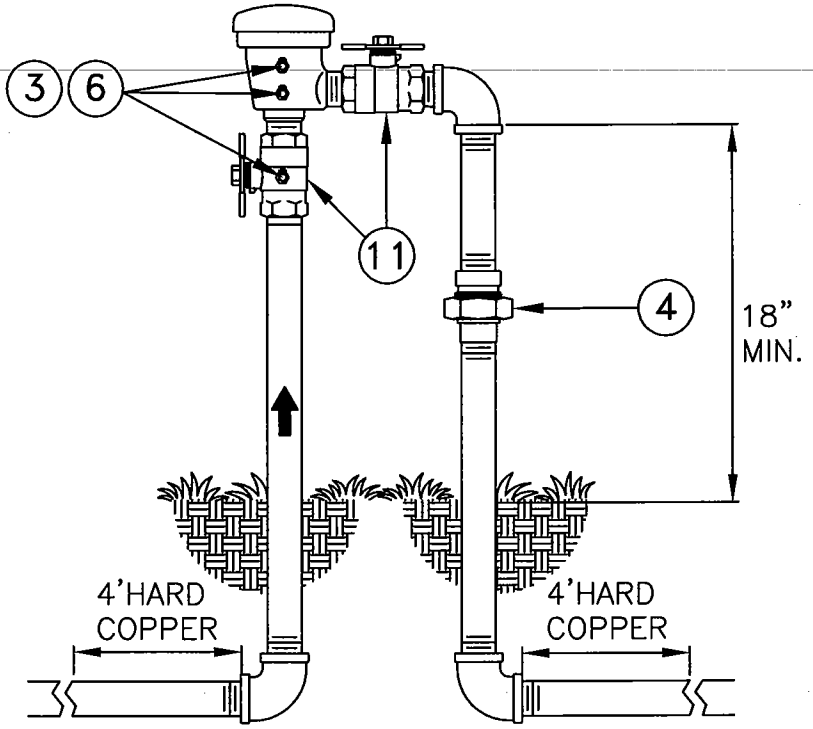

NOTES:

1. BOTTOM OF ASSEMBLY MUST BE AT LEAST 12 - INCHES ABOVE ALL DOWNSTREAM PIPING . IF THIS DISTANCE EXCEEDS 24-INCHES A REDUCED PRESSURE PRINCIPAL ASSEMBLY MUST BE USED(SEE STANDARD DETAIL PE-352-2).
2. ASSEMBLIES INSTALLED ABOVE 5 - FEET FROM THE FLOOR MUST COMPLY WITH CURRENT IPC '06.
3. MINIMUM CLEARANCE IN FRONT OF TEST COCKS TO NEAREST PERMANENT SURFACE SHALL BE 12 - INCHES.
4. MINIMUM OF ONE UNION REQUIRED, TYPE "L" HARD COPPER REQUIRED.
5. ASSEMBLIES MUST BE INSPECTED BY THE CITY OF PEORIA ENVIRONMENTAL/ INDUSTIRAL USERS DIVISION AND TESTED BY A CITY RECOGNIZED TESTER.
6. ALL TEST COCKS SHALL HAVE BRASS PLUGS OR TEST COCK ADAPTERS AND CAPS IN PLACE. TEST COCKS SHALL BE USED FOR TESTING ONLY.
7. PRESSURE VACUUM BREAKERS SHALL NOT BE USED FOR COMMERCIAL IRRIGATION SYSTEMS.
8. A PLUMBING PERMIT IS REQUIRED FOR INSTALLATION.
9. ASSEMBLIES MUST BE INSTALLED AS DESIGNED AND CONSTRUCTED BY THE MANUFACTURER.
10. BALL VALVES ARE REQUIRED UPSTREAM AND DOWNSTREAM OF THE ASSEMBLY.

I:\GUIDE\DETAILS\CAD\PE-355

01/30/2008

CITY OF PEORIA
STANDARD DETAIL PE-360-1
TWO PORT WET BARREL
FIRE HYDRANT INSTALLATION

APPROVALS:

CITY ENGINEER — DATE 3/26/08

UTILITIES DIRECTOR — DATE 3/27/08

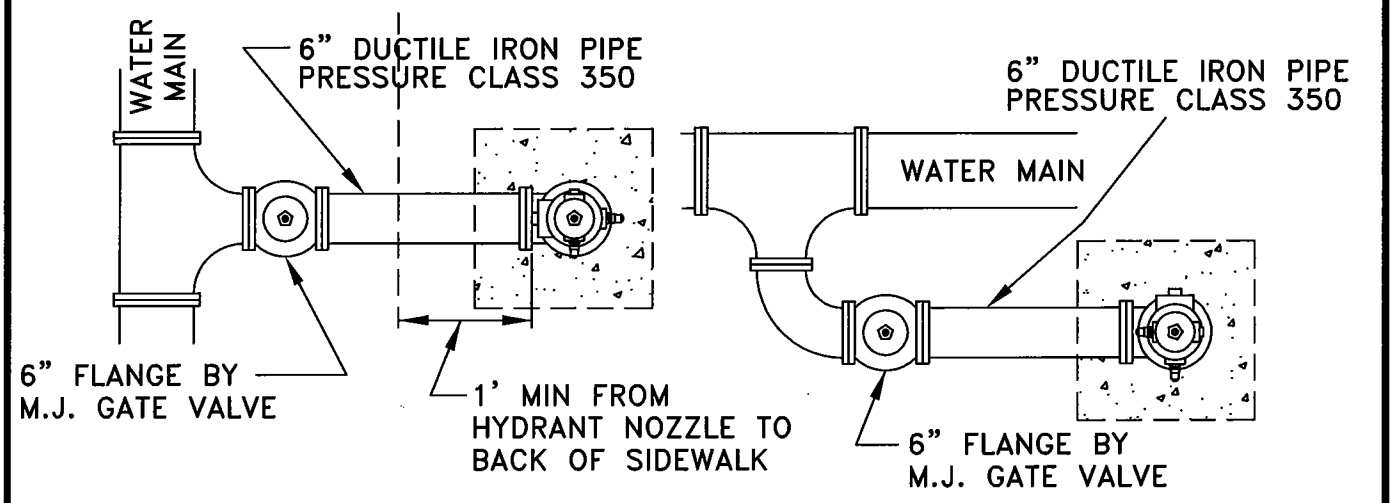

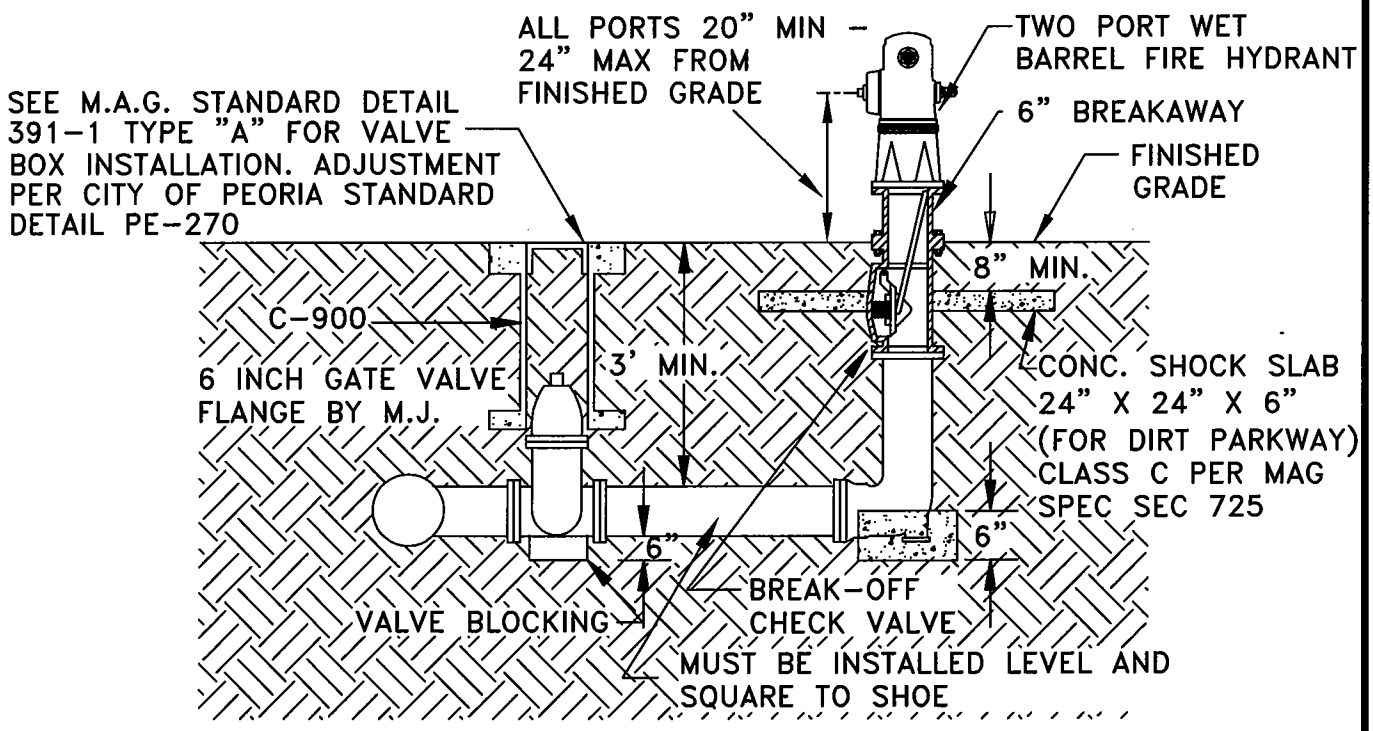

1. ALL JOINTS SHALL BE RESTRAINED, INCLUDING MAIN AT TEE ENDS..
2. APPROVED HYDRANTS INCLUDE: SEE DETAIL PE-101
3. BREAK-OFF CHECK VALVE SHALL BE LONG BEACH IRON WORKS, INC. - MODEL LB400 OR APPROVED EQUAL.
4. THE 6 INCH GATE VALVE SHALL BE FLANGED BY MECHANICAL JOINT.
5. NO VALVES ARE TO BE IN THE CONCRETE.
6. THE 4 1/2" PORT ON THE HYDRANT SHALL BE INSTALLED FACING THE STREET.
7. MINIMUM 3 FOOT DIAMETER CLEARANCE AROUND HYDRANT.
8. THE HYDRANT SHALL HAVE 1 - 2 1/2" PORT, AND 1 - 4 1/2" PORT.
9. NATIONAL STANDARD THREADS REQUIRED ON ALL CONNECTIONS.
10. INSTALL FIRE HYDRANT MARKER PER PEORIA STANDARD DETAIL 271.

I:\GUIDE\DETAILS\CAD\PE-360-1

03/14/2008

CITY OF PEORIA
STANDARD DETAIL PE-360-2
THREE PORT WET BARREL
FIRE HYDRANT INSTALLATION

APPROVALS:

CITY ENGINEER — DATE 8/28/08

UTILITIES DIRECTOR — DATE 3/27/08

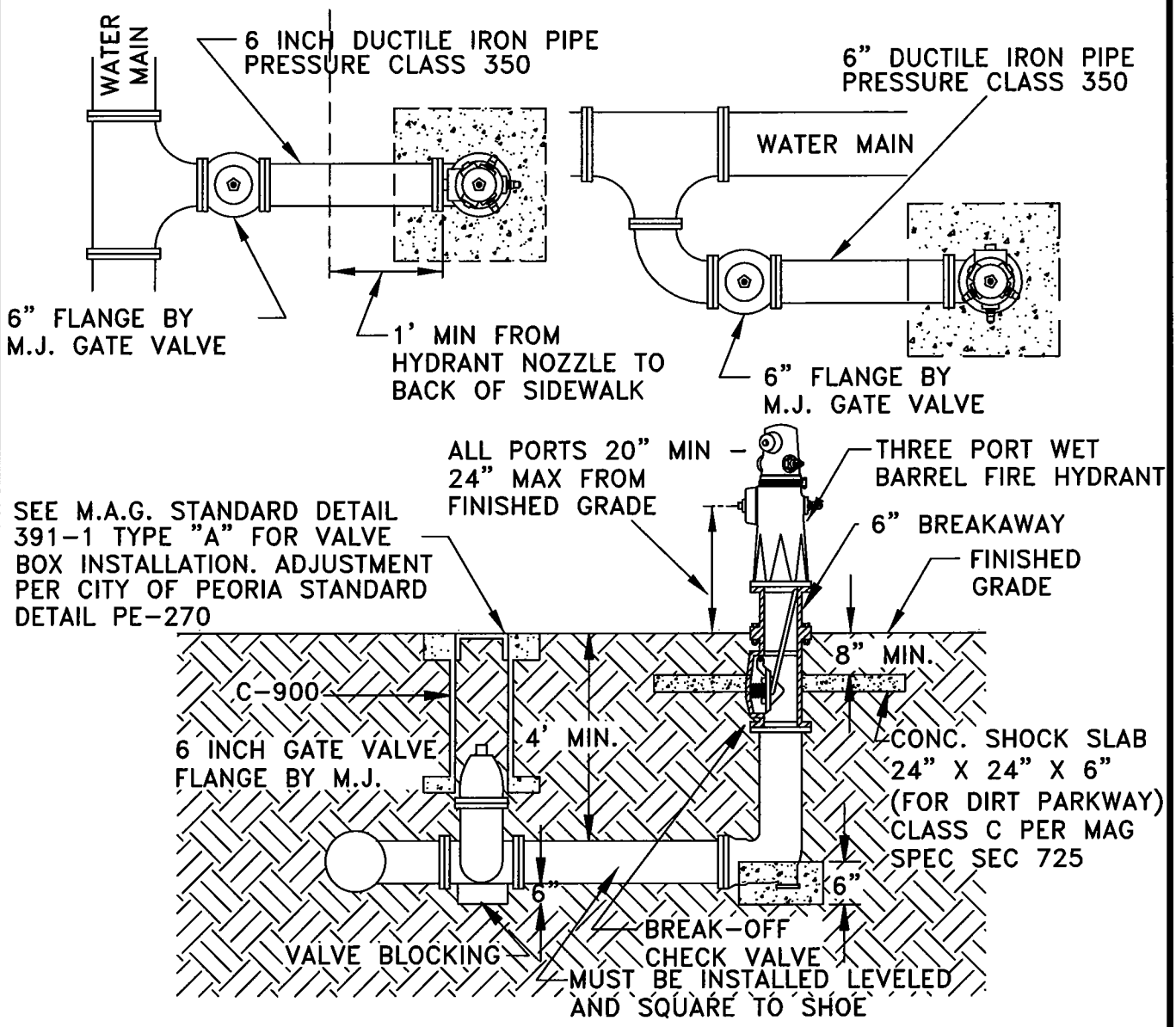

1. ALL JOINTS SHALL BE RESTRAINED, INCLUDING MAIN AT TEE ENDS.
2. APPROVED HYDRANTS INCLUDE: SEE DETAIL PE-101
3. BREAK-OFF CHECK VALVE SHALL BE LONG BEACH IRON WORKS, INC. - MODEL LB400 OR APPROVED EQUAL.
4. THE 6 INCH GATE VALVE SHALL BE FLANGED BY MECHANICAL JOINT.
5. NO VALVES ARE TO BE IN THE CONCRETE.
6. THE 4 1/2" PORT ON THE HYDRANT SHALL BE INSTALLED FACING THE STREET.
7. MINIMUM 3 FOOT DIAMETER CLEARANCE AROUND HYDRANT.
8. THE HYDRANT SHALL HAVE 2 - 2 1/2" PORTS, AND 1 - 4 1/2" PORT.
9. NATIONAL STANDARD THREADS REQUIRED ON ALL CONNECTIONS.
10. INSTALL FIRE HYDRANT MARKER PER PEORIA STANDARD DETAIL 271.

I:\GUIDE\DETAILS\CAD\PE-360-2

03/17/2008

CITY OF PEORIA
STANDARD DETAIL PE-361
HYDRANT/FDC CLEARANCES

APPROVALS:

CITY ENGINEER 8/22/07 DATE

FIRE CHIEF 8-20-07 DATE

(DEPICTION OF DRY BARREL HYDRANT)

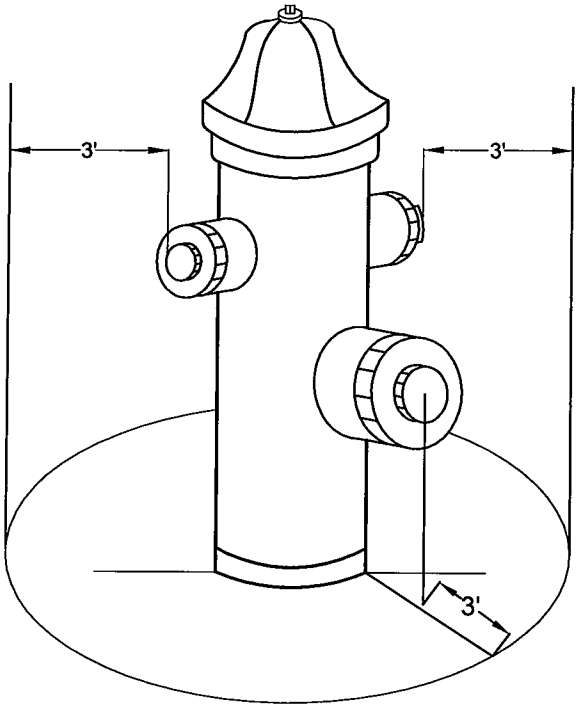

CITY OWNED HYDRANTS SHALL BE PAINTED YELLOW.

PRIVATELY OWNED HYDRANTS SHALL BE PAINTED RED WITH OWNER'S INITIALS STENCILED ON THE BARREL. MIN 2" HIGH WHITE REFLECTIVE LETTERING.

DO NOT PLANT ANY TREES OR SHRUBS THAT WILL ENCROACH ON THE CLEAR SPACE INDICATED, WHEN THE PLANTS OR TREES ARE MATURE.

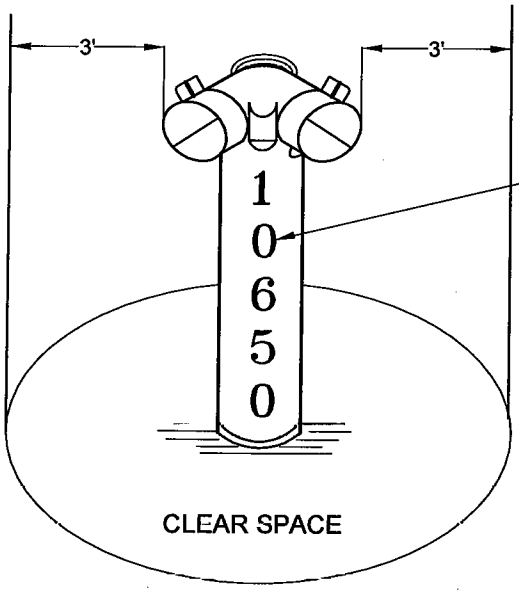

STANDPIPE TO BE PAINTED RED WITH 2" HIGH WHITE REFLECTIVE NUMBERS

(REMOTE FDC BY FIRE MARSHALL AUTHORIZATION ONLY)

I:\GUIDE\DETAILS\CAD\PE-361

08/20/2007

CITY OF PEORIA
STANDARD DETAIL PE-362
FIRE HYDRANT MARKER LOCATION

APPROVALS:

CITY ENGINEER — DATE 8/22/07

FIRE CHIEF — DATE 8-20-07

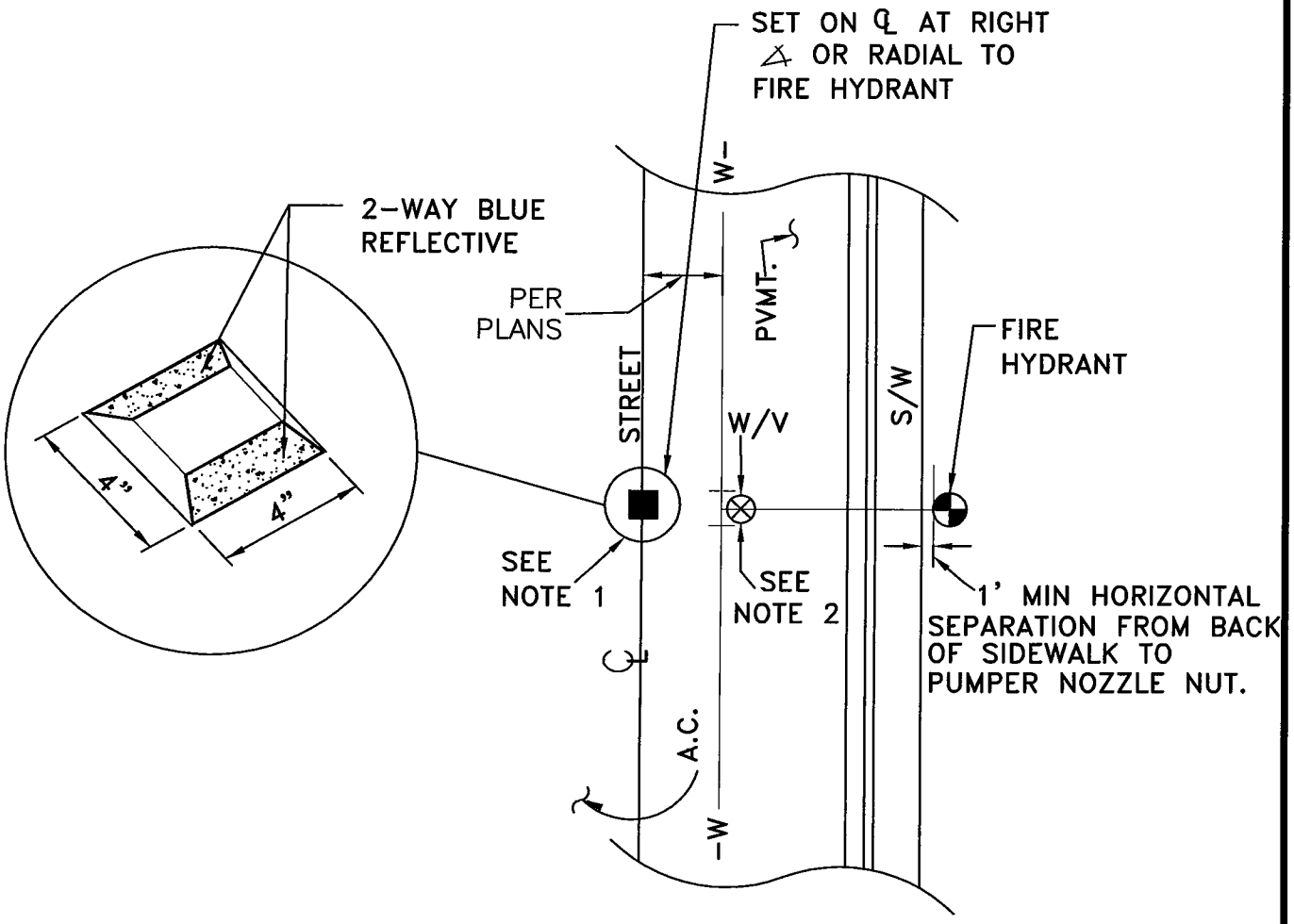

FIRE HYDRANT MARKER LOCATION

1. CENTER MARKER ON LOCAL STREETS.
2. PLACE MARKER OVER TEE ON COLLECTORS & ARTERIALS.

I:\GUIDE\DETAILS\CAD\PE-362

08/20/2007

CITY OF PEORIA
STANDARD DETAIL PE-363

WATER METER BOX
LOCATION AND CONSTRUCTION

APPROVALS:

CITY ENGINEER	DATE	UTILITIES DIRECTOR	DATE
	3/28/08		3/27/08

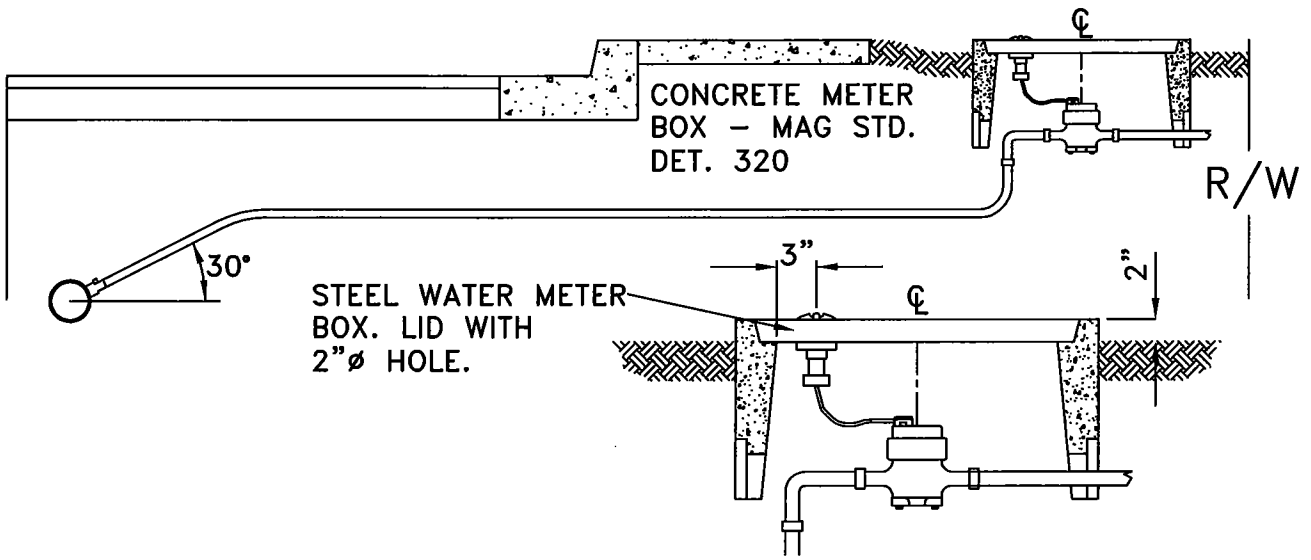

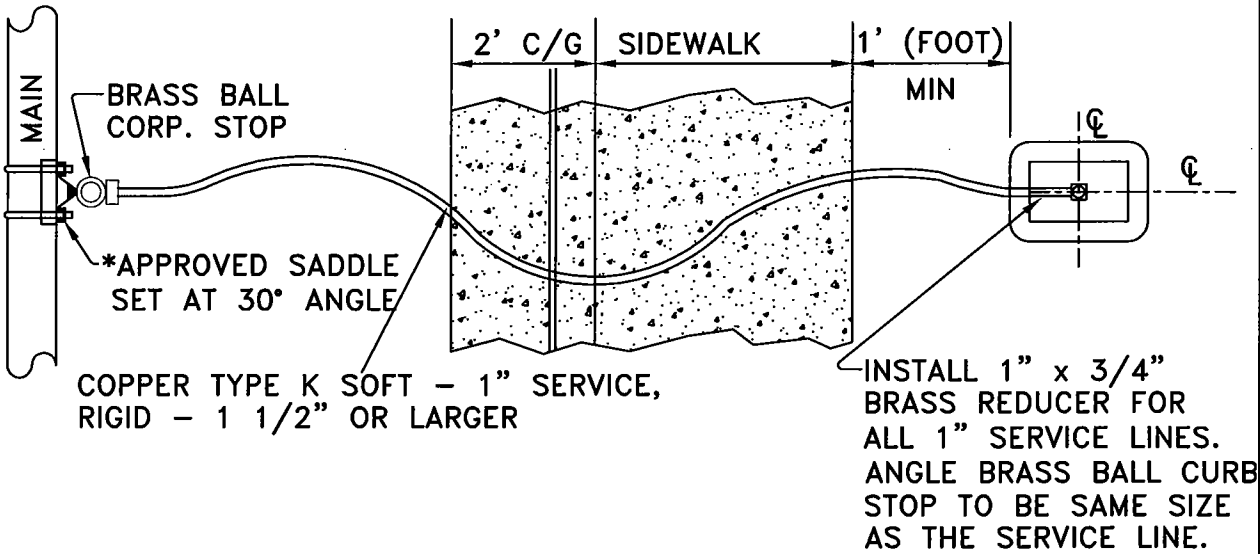

NOTES:

1. 30" MINIMUM COVER IS REQUIRED FOR SERVICE LINES.
2. NO COUPLINGS ALLOWED ON SERVICE LINE. (SOFT COPPER)
3. FOR CUL-DE-SAC LOTS ONLY, THE WATER METER SHALL BE PLACED AT THE BACK OF THE SIDEWALK.
4. ALL WATER METER BOXES TO BE LEVEL WITH THE BACK OF THE SIDEWALK.
5. ALLOWABLE SERVICE LINE SIZES: 1", 1-1/2" & 2".
6. ALL MATERIAL SHALL CONFORM TO THE LATEST MAG SPECIFICATIONS.
7. ACCEPTABLE SADDLES INCLUDE: MUELLER: BR2B
   FORD: 202B
   JONES: J979
   A.Y. MCDONALD: 3825
8. BEDDING: SAND OR CLEAN NATIVE 3/8" MINUS.

I:\GUIDE\DETAILS\CAD\PE-363

03/17/2008

CITY OF PEORIA
STANDARD DETAIL PE-371
WATER QUALITY SAMPLING STATION

APPROVALS:

CITY ENGINEER — DATE 6/7/07

UTILITIES DIRECTOR — DATE 5/31/07

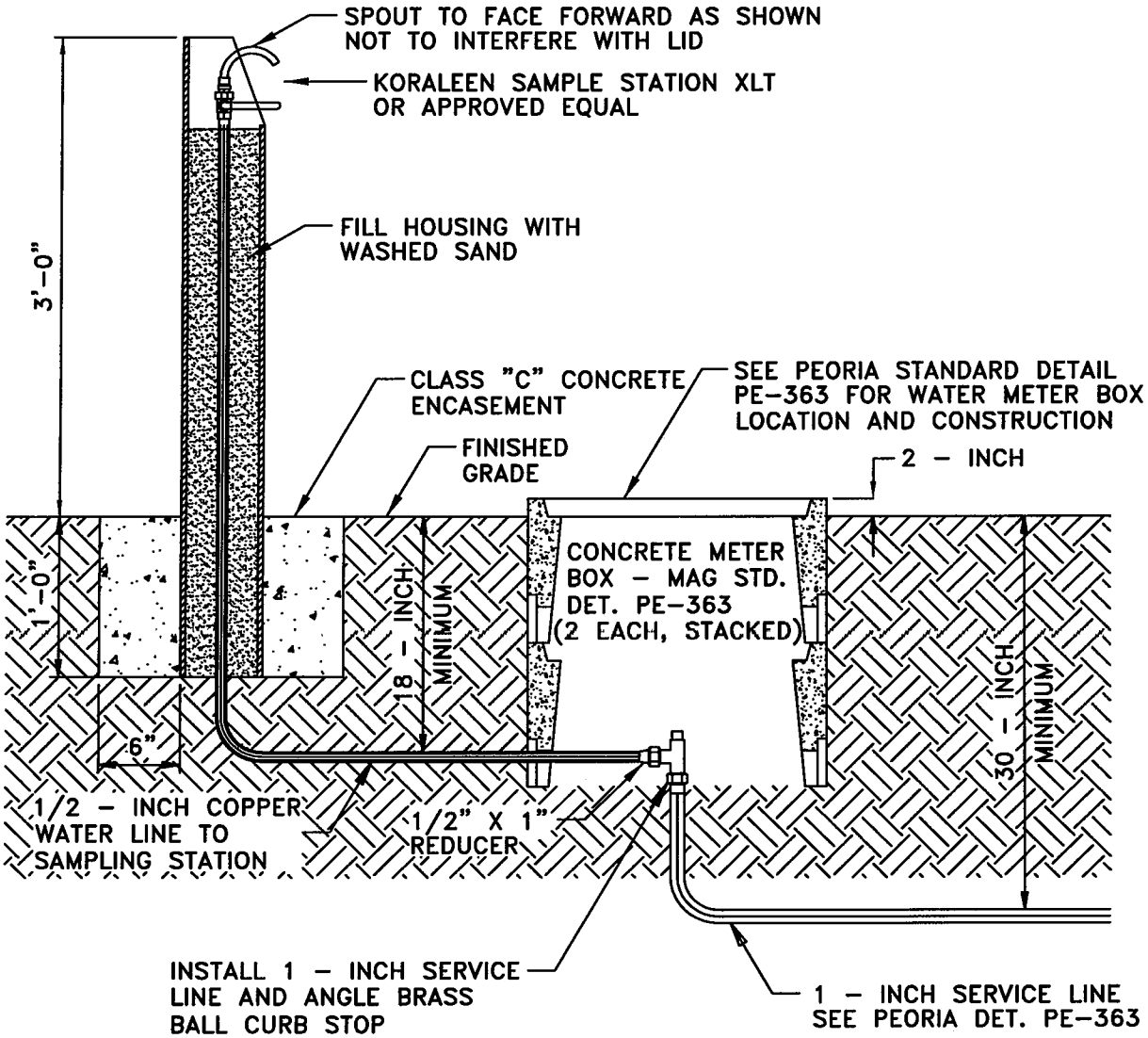

NOTE:

1. THE LOCATION OF THE SAMPLING STATION SHALL BE A MINIMUM OF 5 FEET BEHIND BACK OF CURB.

I:\GUIDE\DETAILS\CAD\PE-371

05/29/2007

CITY OF PEORIA
STANDARD DETAIL PE-395
UNIVERSAL AIR-VACUUM VALVE

APPROVALS:

CITY ENGINEER — DATE 3/10/08

UTILITIES DIRECTOR — DATE 2/12/08

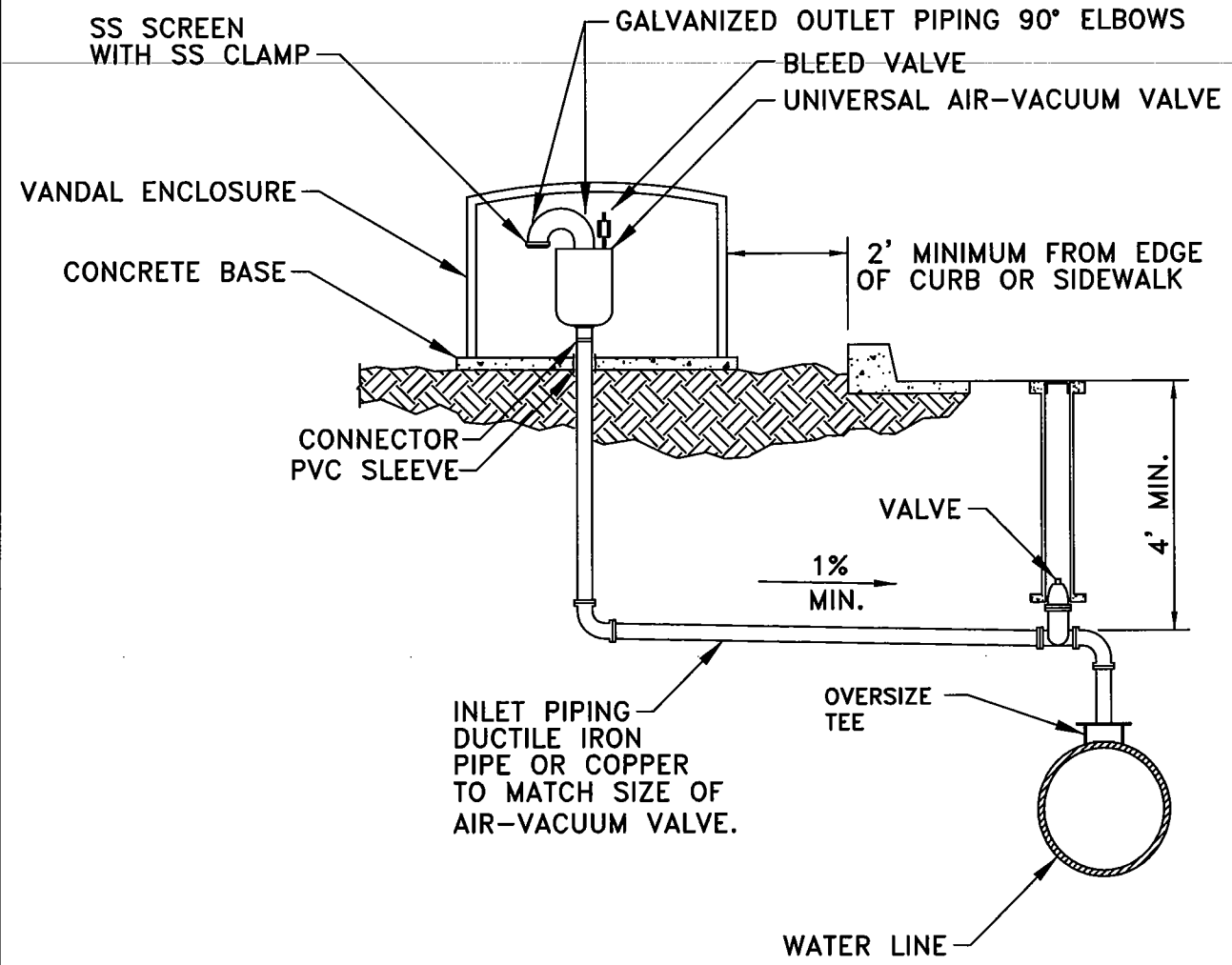

NOTES:

1. VANDAL ENCLOSURE TO BE "LOCKBOX" OR APPROVED EQUAL.
2. LINE FROM MAIN TO AIR RELEASE VALVE TO BE INSTALLED WITH POSITIVE SLOPE TO PREVENT BLOCKAGE.
3. CONCRETE BASE – 4 – INCH THICK WITH NUMBER 4 REBAR @ 12 – INCH EACH WAY. BASE DIMENSIONS SHALL BE 12 – INCHES GREATER THAN INSIDE DIMENSIONS OF VANDAL ENCLOSURE.
4. FIELD PAINT ALL FITTINGS AND VANDAL ENCLOSURE "DESERT TAN."
5. SIZE OF UNIVERSAL AIR-VACUUM VALVE AND APPURTENANCES SHALL BE SPECIFIED BY THE DESIGN ENGINEER.

I:\GUIDE\DETAILS\CAD\PE-395

01/30/2008

CITY OF PEORIA
STANDARD DETAIL PE-398
TYPICAL VALVE LOCATION

APPROVALS:

CITY ENGINEER — DATE 2/27/07

UTILITIES DIRECTOR — DATE 2/26/07

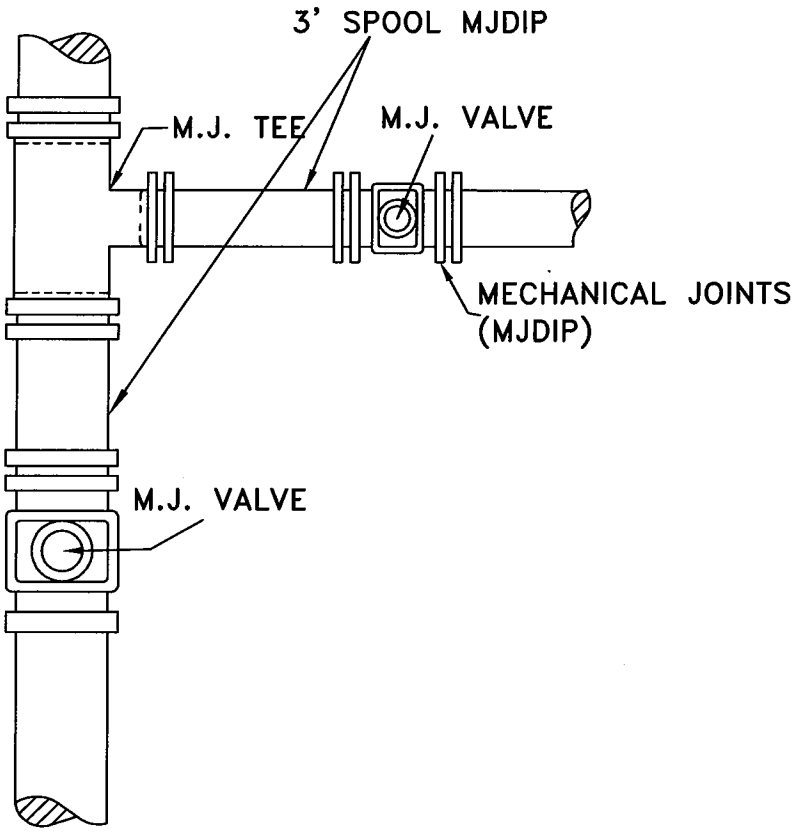

I:\GUIDE\DETAILS\CAD\PE-398

02/05/2007

CITY OF PEORIA
STANDARD DETAIL PE-401
BEDDING AND BACKFILL

APPROVALS: David Moody 3/10/08
CITY ENGINEER DATE

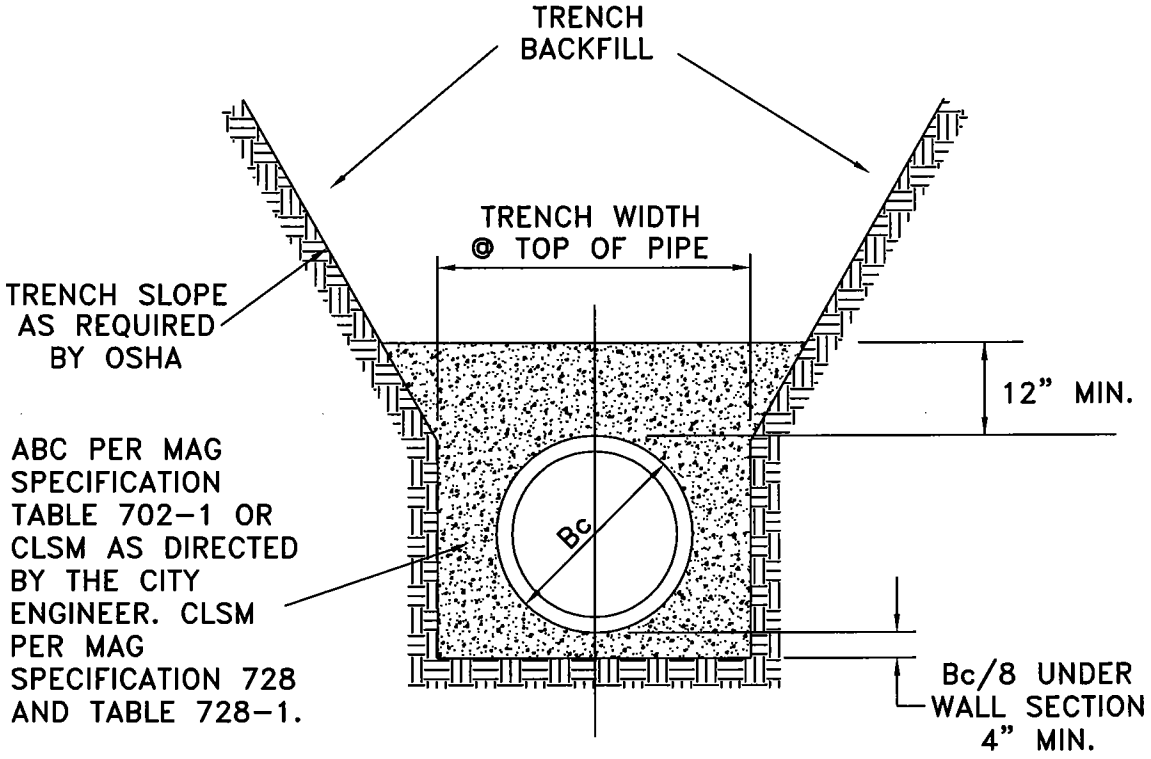

BC = OUTSIDE DIAMETER OF WALL SECTION

NOTE:

1. TRENCH BACKFILL SHALL CONFORM TO MAG SPECIFICATION 601.4.3

* CMP UNDERGROUND OR CONCEALED RETENTION/DETENTION FACILITIES SHALL CONFORM TO CITY OF PEORIA STANDARD DETAIL PE-402.

I:\GUIDE\DETAILS\CAD\PE-401

02/07/2008

CITY OF PEORIA
STANDARD DETAIL PE-402
BEDDING AND BACKFILL FOR CMP

APPROVALS: _____ 3/10/08
CITY ENGINEER DATE

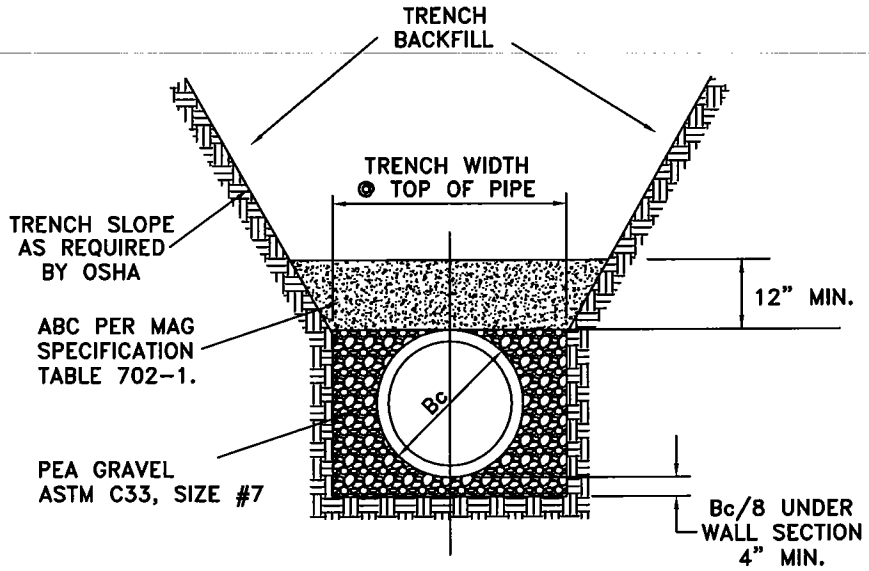

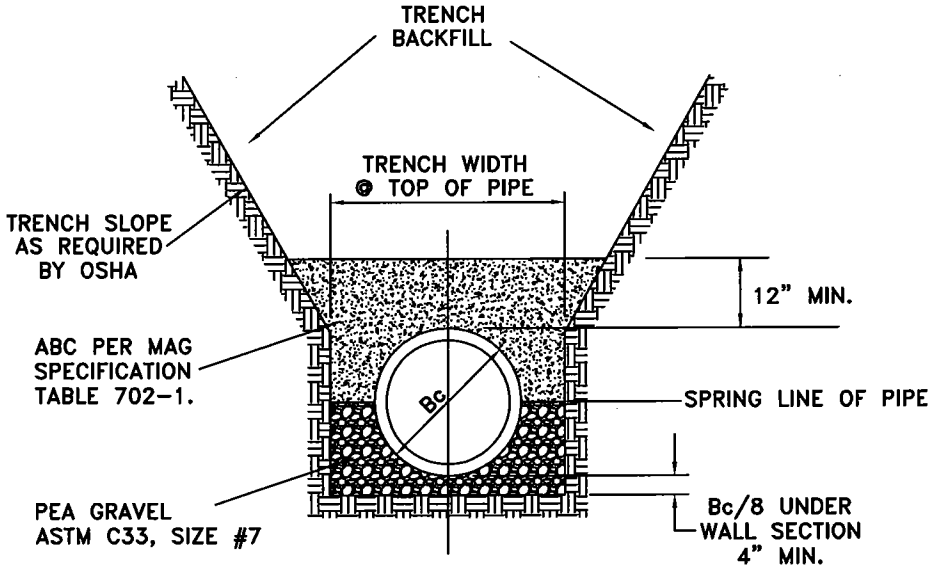

BC = OUTSIDE DIAMETER OF CMP

NOTE:

1. TRENCH BACKFILL SHALL CONFORM TO MAG SPECIFICATION 601.4.3

I:\GUIDE\DETAILS\CAD\PE-402

02/07/2008

CITY OF PEORIA
STANDARD DETAIL PE-450
TYPICAL GREASE WASTE
INTERCEPTOR REQUIREMENTS

APPROVALS:

CITY ENGINEER — DATE 3/28/08

UTILITIES DIRECTOR — DATE 3/28/08

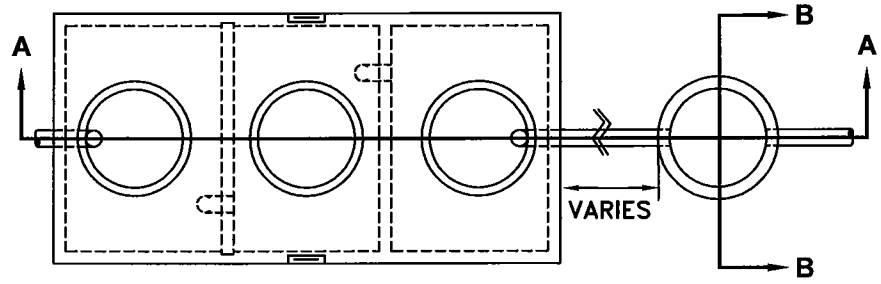

PLAN VIEW

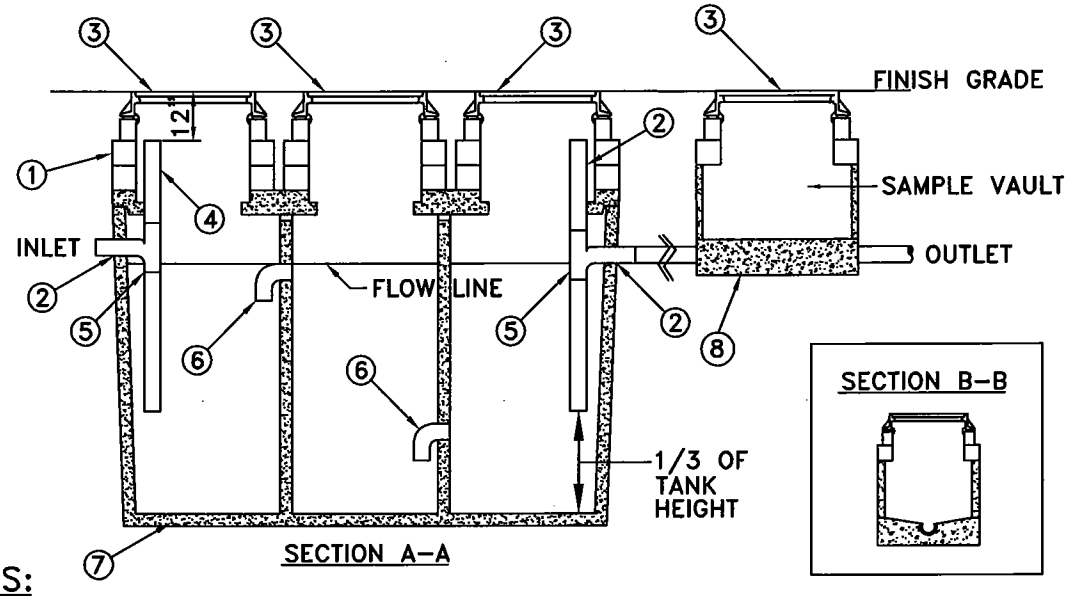

NOTES:

1. ALL GRADIENT RISERS, INCLUDING THE MANHOLE FRAME, WILL HAVE THE INTERIOR SEALED WITH NON-SHRINK GROUT.
2. EXTERNAL INLET AND OUTLET PIPE ACCESS HOLES SHALL BE SEALED WITH NON-SHRINK GROUT.
3. MANHOLE, FRAME, AND COVER FOR INTERCEPTOR AND SAMPLE VAULT MUST HAVE CONCRETE COLLAR PER M.A.G. DETAIL 422. (M.A.G. DETAIL 424 IN TRAFFIC AREAS)
4. INTERNAL SANITARY "T"s SHALL BE EXTENDED TO 12-INCHES BELOW THE MANHOLE LID OR ACCESS LID
5. SANITARY TEE (TYPICAL) - BOTH INLET AND OUTLET DOWN DRAFT TUBES ARE TO BE 1/3 OF THE TOTAL TANK HEIGHT FROM THE BOTTOM OF THE TANK.
6. 4-INCH DIAMETER MINIMUM PVC ELBOW
7. INTERCEPTOR MUST BE SMITH PRE-CAST OR EQUILVALENT. (CAPACITY VARIES)
8. SAMPLE VAULT MUST BE SMITH PRE-CAST OR EQUILVALENT.
9. INTERCEPTOR AND VAULT MUST BE INSPECTED BY THE CITY OF PEORIA ENVIRONMENTAL/INDUSTRIAL USER DIVISION
10. A PLUMBING PERMIT IS REQUIRED FOR REPLACEMENT.

03/21/2008

I:\GUIDE\DETAILS\CAD\PE-450

CITY OF PEORIA
STANDARD DETAIL PE-559-1
STORM DRAIN INLET MARKER

APPROVALS: David Mead 2/22/07
CITY ENGINEER DATE

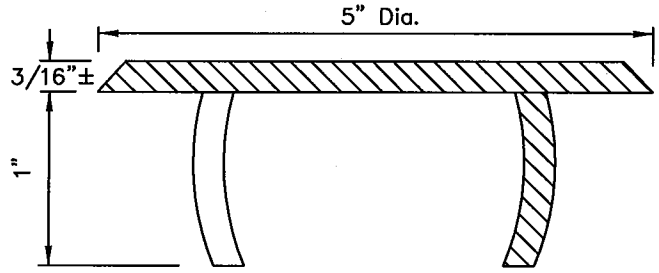

TYPE "A:
TO BE INSTALLED IN WET CONCRETE
DURING CONSTRUCTION

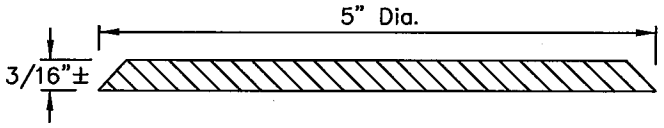

TYPE "B"
TO BE INSTALLED WITH ADHESIVE
ON EXISTING STRUCTURES

NOTES

1. Material: Cast Aluminum
2. The Total Width Of Individual Letters To Be Such That Letters And Words Are Equally Spaced And Balanced.
3. Letters To Be 1/2" In Height. Type Of Letters To Be Submitted For Approval.

I:\GUIDE\DETAILS\CAD\PE-559-1

01/24/2007

CITY OF PEORIA
STANDARD DETAIL PE-559-2
STORM DRAIN INLET MARKER ON CATCH BASIN/SCUPPER

APPROVALS: David Mraz 2/22/07
CITY ENGINEER DATE

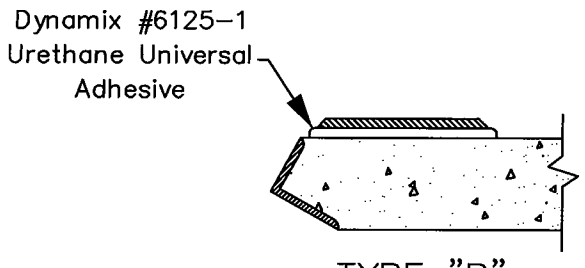

TYPE "B"

TO BE INSTALLED WITH ADHESIVE
ON EXISTING STRUCTURES

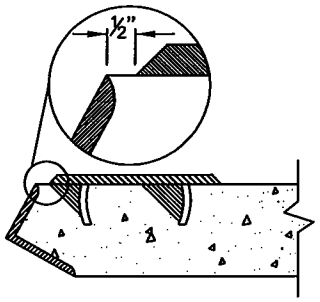

TYPE "A"

TO BE INSTALLED IN WET CONCRETE
DURING CONSTRUCTION

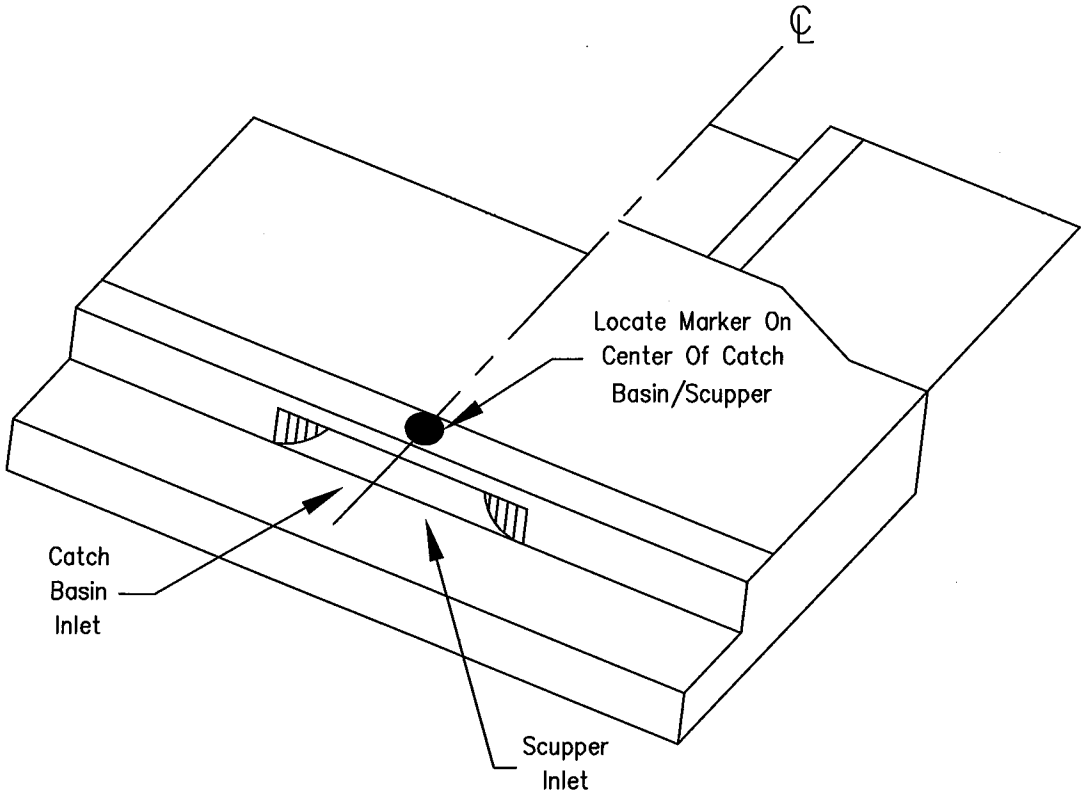

I:\GUIDE\DETAILS\CAD\PE-559-2

01/24/2007

CITY OF PEORIA
STANDARD DETAIL PE-559-3
STORM DRAIN INLET MARKER ON HEADWALL

APPROVALS: _____ 2/22/07
CITY ENGINEER DATE

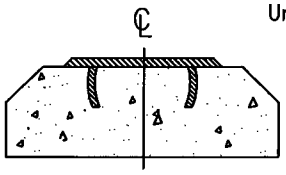

TYPE "A"
TO BE INSTALLED IN WET CONCRETE DURING CONSTRUCTION

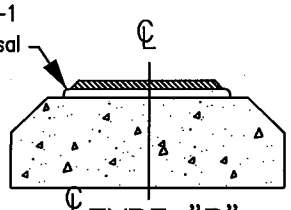

TYPE "B"
TO BE INSTALLED WITH ADHESIVE ON EXISTING STRUCTURES

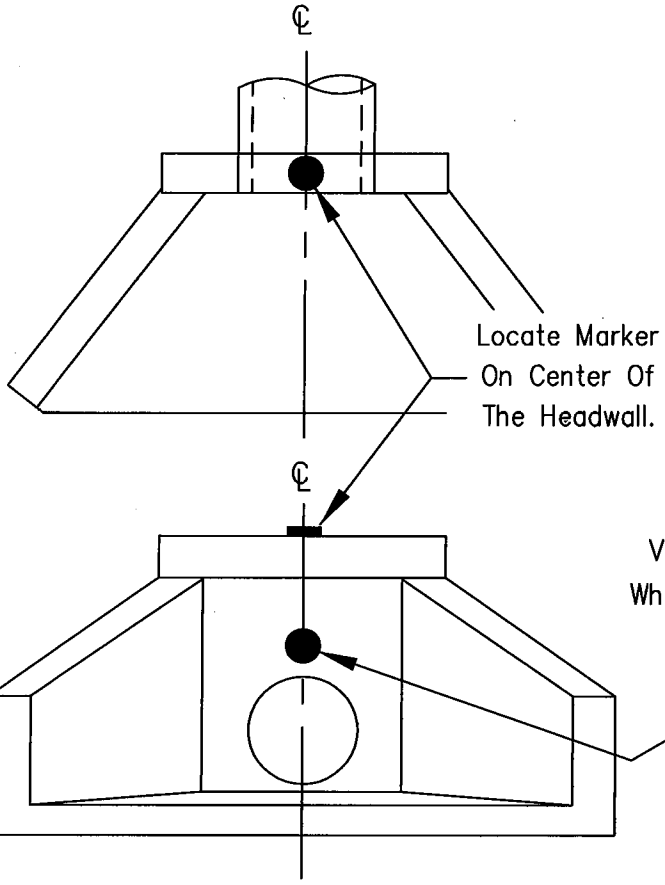

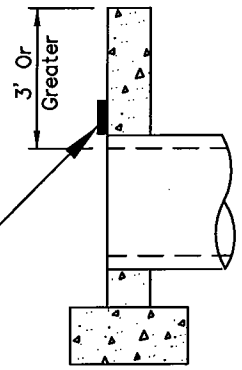

Locate Marker On the Vertical Face Of Headwall When Face Is 3' Or Greater. Center On Headwall.

I:\GUIDE\DETAILS\CAD\PE-559-3

01/24/2007