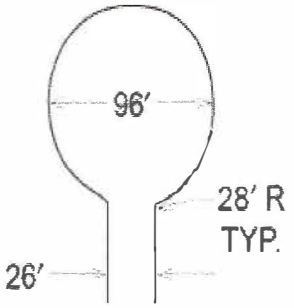

96-FOOT DIAMETER
CUL-DE-SAC

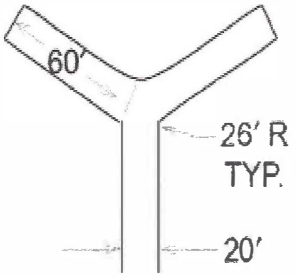

60-FOOT "Y"

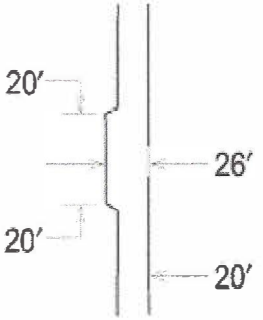

MINIMUM CLEARANCE
AROUND A FIRE
HYDRANT

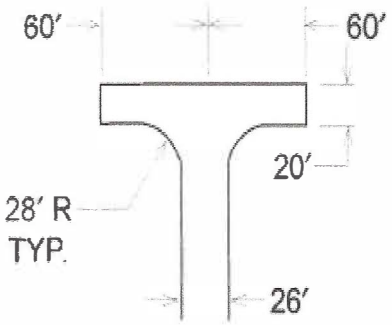

120-FOOT HAMMERHEAD

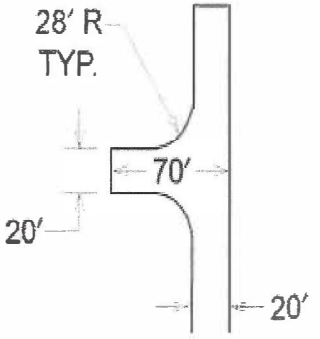

ACCEPTABLE ALTERNATIVE
TO 120-FOOT HAMMERHEAD

For SI: 1 foot = 304.8 mm.