GENERAL NOTES:

1. NOTE USED.
2. PROPERTY OWNER/MANAGEMENT PADLOCK
3. FIRE DEPT. PADLOCK SHALL BE ACCESSIBLE FROM BOTH SIDES OF GATE.
4. APPROVED FIRE LANE SIGNS WITH REFLECTIVE BACKGROUND, PLACED BACK TO BACK AND FASTENED ON ALL 4 CORNERS. ¼" X 1½" MOUNTING STRAPS.
5. FIRE LANE STRIPING SHALL BE PROVIDED AT EACH MANUAL GATE.
6. THE MINIMUM OVERALL WIDTH OF THE GATE OPENING SHALL BE 20 FT.
7. WELD MODIFIED L–BRACKET TO GATE FRAME. ROUND ALL EDGES. (TYPICAL 2 PLACES)
8. LOCKING BAR LENGTH IS DETERMINED BY THE FRAME WIDTH AND THE GAP WIDTH BETWEEN THE 2 GATES. REMOVE ALL SHARP EDGES / ROUND ALL CORNERS.
9. APPROVED FIRE DEPT. ACCESS SIGN WITH WHITE 3M DIAMOND GRADE DG³ BACKGROUND PLACED BACK TO BACK.

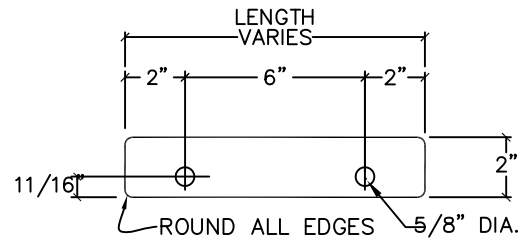

8 LOCKING BAR DETAIL

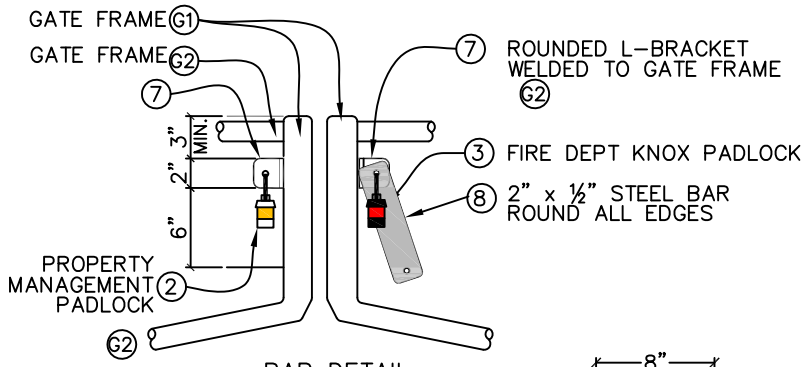

BAR DETAIL
UNLOCKED POSITION

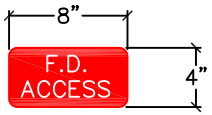

9 ACCESS SIGN DETAIL

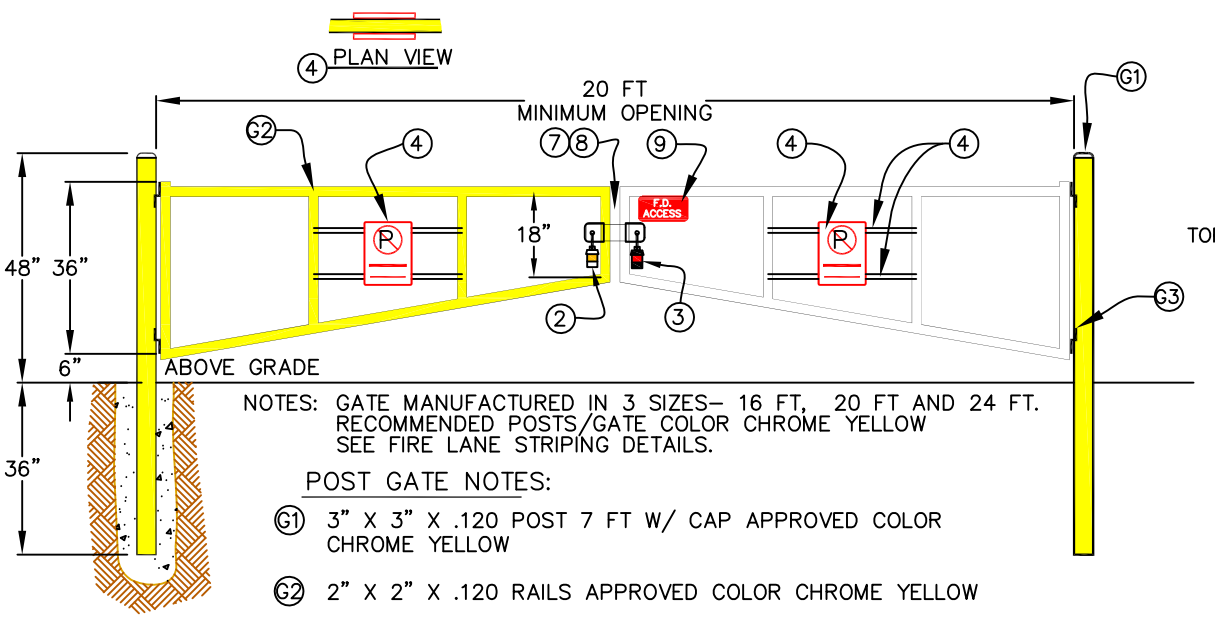

NOTES: GATE MANUFACTURED IN 3 SIZES– 16 FT, 20 FT AND 24 FT.
RECOMMENDED POSTS/GATE COLOR CHROME YELLOW
SEE FIRE LANE STRIPING DETAILS.

POST GATE NOTES:

G1 3" X 3" X .120 POST 7 FT W/ CAP APPROVED COLOR CHROME YELLOW

G2 2" X 2" X .120 RAILS APPROVED COLOR CHROME YELLOW

G3 5" HEAVY DUTY BARREL HINGES (TYPICAL 4 PLACES)

7 L-BRACKET

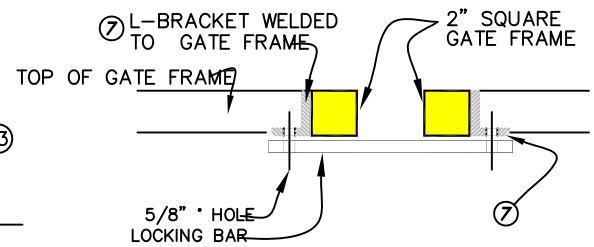

8 PLAN VIEW
LOCKING BAR DETAIL